YAMAHA

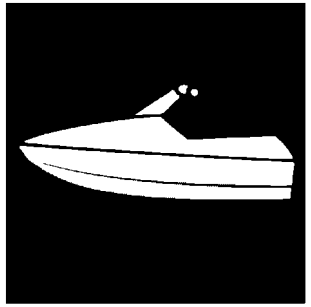

PARTS CATALOGUE

WaveRunner VX Limited HO
VX1900A-C (F7M7 /6MED/6ME1)

YAMAHA
GENUINE
Parts & Accessories

31F7M-100E1

( )

VX1900A-C
PARTS CATALOGUE
©2025 by Yamaha Motor Co., Ltd.
1st edition, August 2025
All rights reserved.
Any reprinting or unauthorized use
without the written permission of
Yamaha Motor Co., Ltd.
is expressly prohibited.
Printed in Japan.

FOREWORD

This Parts Catalogue is related to the parts for the model(s) on the cover page. When you are ordering replacement parts, please refer to this Parts Catalogue and quote both part numbers and part names correctly.

1. Modifications or additions which have been made after the issue of the Parts Catalogue will be announced in the Parts News.
   It is advisable that you make the necessary corrections to the Parts Catalogue according to the Parts News.

2. Abbreviations
   The following abbreviations are used in this Parts Catalogue.

   “UR” Use specified parts number.

   “UN” Use as many as needed.

   “AP” Alternate Parts

   “LM” Locally Made (Parts need to be ordered locally)

   “F#” Frame No. (Applicable machine No.)

   “O/S” Over Size

3. The number of components for assembly
   - Parts, which are to be supplied in an assembly, are listed with a dot (.) in front of the part name as shown below.
   - The numeral appearing to the right of each component part indicates the quantity of parts for each assembly unit.

PART NO.	DESCRIPTION	Q’TY	REMARKS
2F5–83310–60	FRONT FLASHER LIGHT ASSY	2	
115–83311–60	.BULB (6V–18W)	1	

4. Applicable colours of graphics are represented in the “REMARKS” as shown below.

PART NO.	DESCRIPTION	Q’TY	REMARKS
2N4–24110–00–X5	FUEL TANK COMP.	2	MXR
3J1–24240–10	.GRAPHIC, FUEL TANK	1	FOR MXR

5. Note that the illustrations for reference in finding parts numbers are not to be used for assembling. When assembling, please use the applicable service manual.

6. The asterisk (*) before a reference number indicates modified items after the first edition.

7. Applicable Serial No.

Engine Serial No.

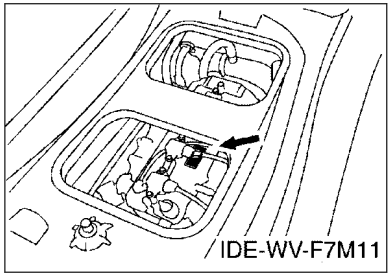

Primary Identification No.

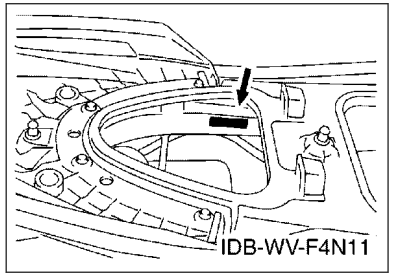

8. Applicable Colour Code (The (*) mark shows Model colour.)

Abbreviation	Colour Name	Colour Code
VPBM6(*)	VIVID PURPLISH BLUE METALLIC 6	1002

9. Quantity Column Information

Column No.	Name Of Q'ty Column	Destination
1	F7M7	CANADA,EUROPE

10. Applicable Starting Serial No.

Engine Serial No.

Serial No.	Name Of Q'ty Column	Model Code

Primary Identification No.

Serial No.	Name Of Q'ty Column	Model Code
F7M-814181	F7M7	F7M7

CONTENTS

CYLINDER 1....1
CYLINDER 2....2
CRANKCASE....3
CRANKSHAFT & PISTON....5
VALVE....6
INTAKE 1....8
INTAKE 2....9
OIL PUMP....10
OIL PAN....11
OIL COOLER....12
BREATHER OIL....13
EXHAUST 1....14
EXHAUST 2....15
JET UNIT 1....17
JET UNIT 2....19
JET UNIT 3....20
JET UNIT 4....21
GENERATOR....22
STARTING MOTOR....23
ELECTRICAL 1....24
ELECTRICAL 2....26
ELECTRICAL 3....27
ELECTRICAL 4....29
ENGINE MOUNT....30
ENGINE HATCH 1....31
ENGINE HATCH 2....33
ENGINE HATCH 3....35
HULL & DECK....37
GUNWALE & MAT....40
VENTILATION....42
SEAT & UNDER LOCKER....43
FUEL TANK....45
BILGE PUMP....47
EXHAUST 3....48
CONTROL CABLE....49
STEERING 1....51
STEERING 2....52
STEERING 3....54
GRAPHICS....55
IMPORTANT LABELS....56
REPAIR KIT 1....57

INDEX

NUMERICAL INDEX....58

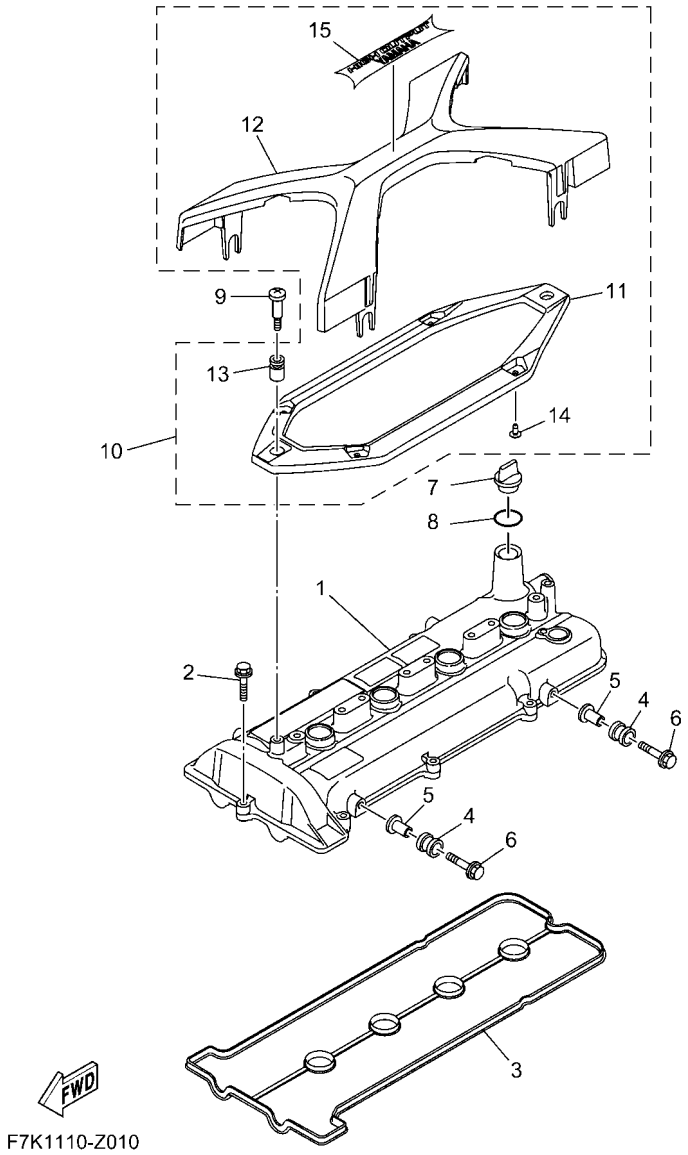

F7K1110-Z010

FIG. 1 CYLINDER 1

REF. NO.	PART NO.	DESCRIPTION	F7M7					REMARKS
1	6LE–11191–00	COVER, CYLINDER HEAD 1	1					
2	90105–06028	BOLT, FLANGE	8					
3	6LE–11193–00	GASKET, HEAD COVER 1	1					
4	68V–82317–01	DAMPER, IGNITION COIL	4					
5	90387–06119	COLLAR	4					
6	95824–06025	BOLT, FLANGE	4					
7	3Y1–15363–10	PLUG, OIL	1					
8	93210–19123	O-RING	1					
9	6S5–E118E–02	BOLT, COVER MOUNTING	2					
10	6LE–1110M–00	COVER ASSY 1	1					
11	6LE–1111M–01	.COVER 1	1					
12	6LE–1111N–00	.COVER 2	1					
13	6LE–11328–00	.GROMMET, ANODE	2					
14	90149–05050	.SCREW	4					
15	6LE–1111K–00	.EMBLEM	1					

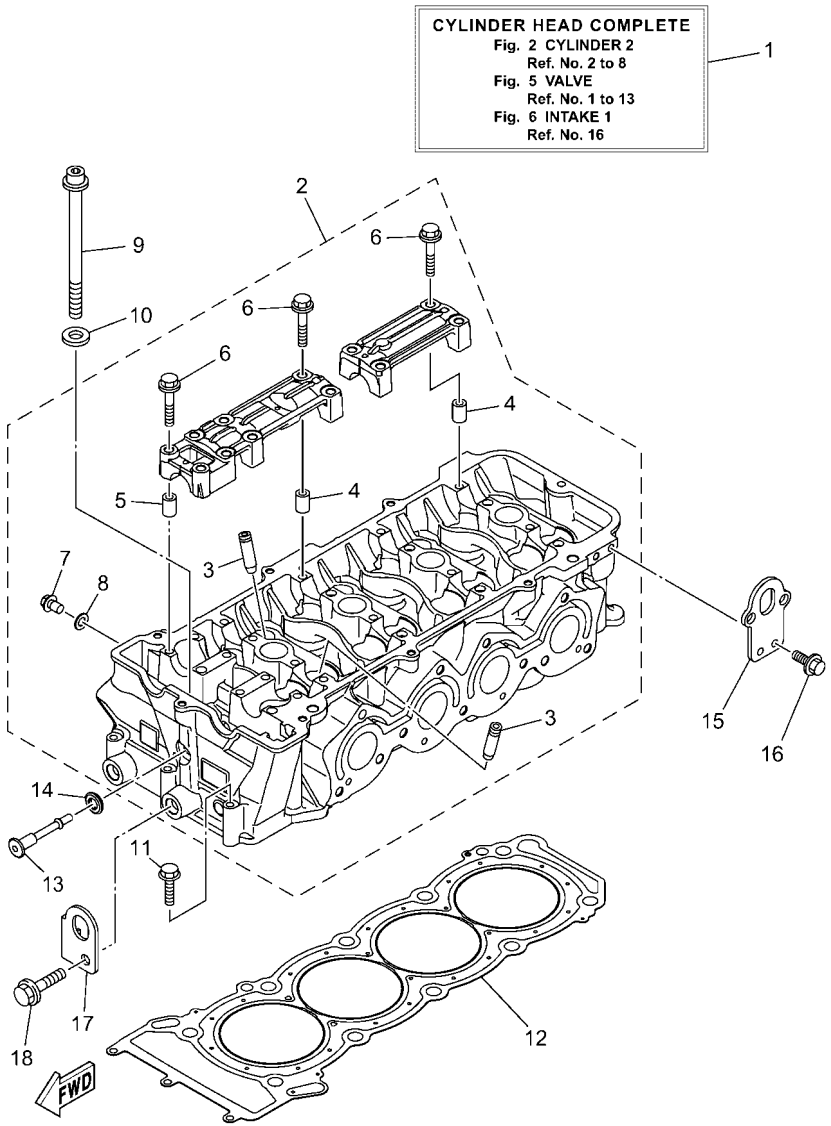

F7L4100-0020

FIG. 2 CYLINDER 2

REF. NO.	PART NO.	DESCRIPTION	F7M7					REMARKS
1	6LE–W009A–01	CYLINDER HEAD COMPLETE	1					
2	6LE–11102–00	CYLINDER HEAD ASSY	1					
3	6S5–11133–10	.GUIDE, VALVE 1	16					
4	91809–16002	.PIN, DOWEL	4					
5	91809–16002	.PIN, DOWEL	4					
6	90119–07235	.BOLT/WASHER-CAM CAPS	24					
7	95E34–08012	.BOLT, FLANGE DEEP RECESS	1					
8	90430–08119	.GASKET	1					
9	6S5–12228–01	BOLT	10					
10	6HL–12456–00	WASHER	10					
11	97513–06555	BOLT, WITH WASHER	3					
12	6LE–11181–00	GASKET, CYLINDER HEAD 1	1					
13	90109–06293	BOLT	1					
14	5VY–1111G–00	RUBBER, MOUNT 1	1					
15	6BH–1111E–00	HANGER, ENGINE 2	2					
16	90119–06078	BOLT, WITH WASHER	4					
17	6BH–11119–00	HANGER, ENGINE	1					
18	97513–10525	BOLT, WITH WASHER	1					

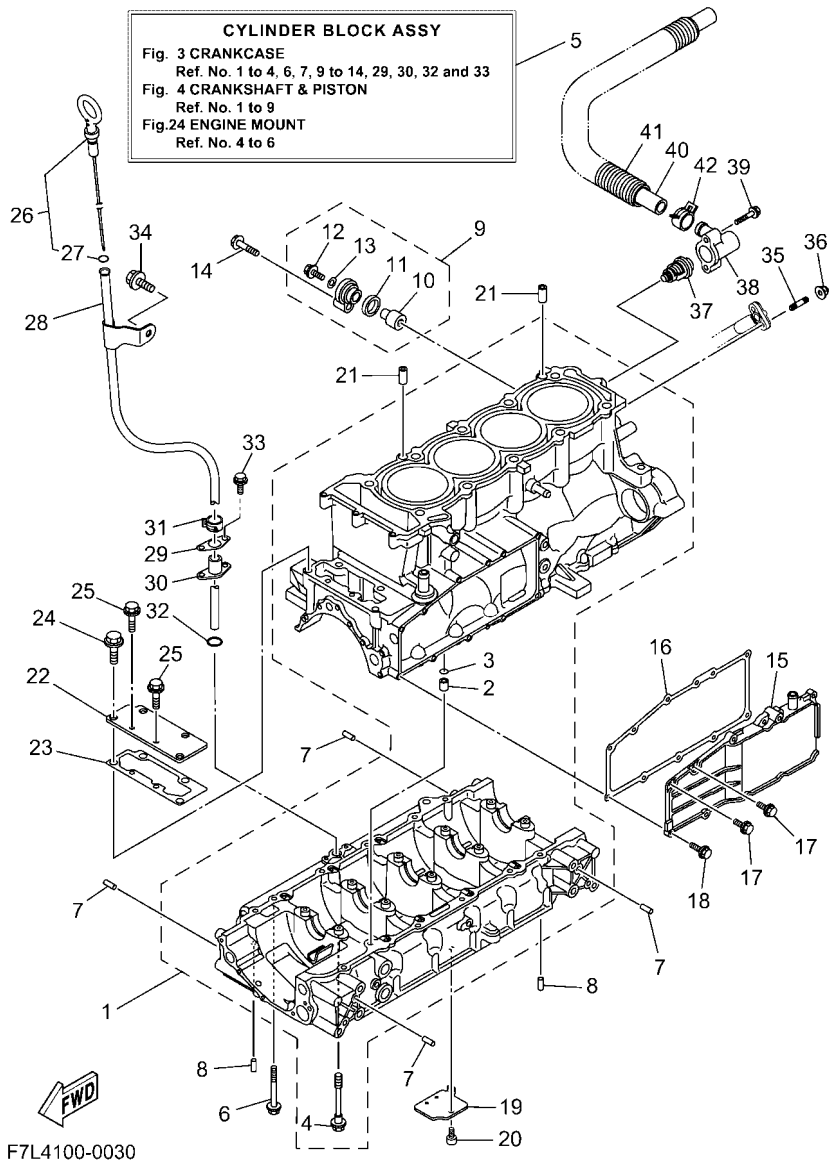

FIG. 3 CRANKCASE

REF. NO.	PART NO.	DESCRIPTION	F7M7					REMARKS
1	6LE–15109–10	CRANKCASE ASSY	1					
2	99530–10114	.PIN, DOWEL	1					
3	93210–11453	.O-RING	1					
4	90105–10071	.BOLT, FLANGE	10					
5	6LE–W009B–10	CYLINDER BLOCK ASSY	1					
6	95814–06070	BOLT, FLANGE	12					
7	93606–12019	PIN, DOWEL	8					
8	93604–10M03	PIN, DOWEL	2					
9	69J–11301–11	ANODE COVER ASSY	1					
10	68V–11325–02	.ANODE	1					
11	67F–11328–01	.GROMMET, ANODE	1					
12	90105–06M07	.BOLT, FLANGE	1					
13	90430–06M03	.GASKET	1					
14	97E95–08540	BOLT, HEXAGON W/W DEEP RECESS	1					
15	6S5–1131M–10–8P	COVER	1					
16	6BH–13557–00	GASKET	1					
17	95E34–06014	BOLT, FLANGE DEEP RECESS	2					
18	95E34–06020	BOLT, FLANGE DEEP RECESS	9					
19	6S5–13337–10	PLATE, BAFFLE LOWER	1					
20	90110–06182	BOLT, HEXAGON SOCKET HEAD	1					
21	99530–10114	PIN, DOWEL	2					
22	6BH–1131C–00	COVER, JOINT	1					
23	6BH–1131B–00	GASKET, COVER	1					
24	95814–08020	BOLT, FLANGE	4					
25	95814–06016	BOLT, FLANGE	2					
26	6ET–15362–00	PLUG, OIL LEVEL	1					
27	93210–06632	.O-RING	1					

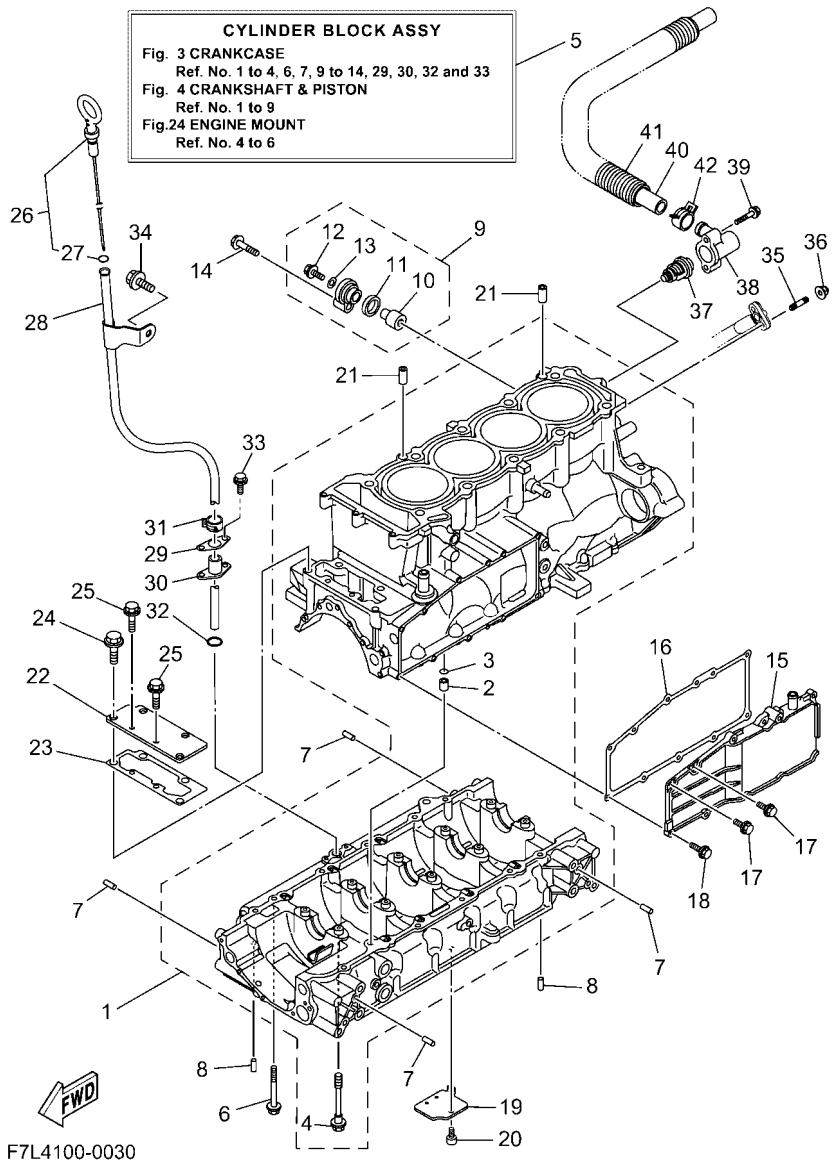

FIG. 3 CRANKCASE

REF. NO.	PART NO.	DESCRIPTION	F7M7					REMARKS
28	6LE–8572F–00	PIPE, OIL LEVEL	1					
29	6BH–1319K–00	PLATE	1					
30	6CS–85516–00	SPACER	1					
31	90467–150A1	CLIP	1					
32	93210–12016	O-RING	1					
33	90109–06268	BOLT	2					
34	90105–08021	BOLT, FLANGE	1					
35	90116–06051	BOLT, STUD	2					
36	90176–06047	NUT,CAP	2					
37	6D3–12411–00	THERMOSTAT	1					
38	6BH–12413–00	COVER, THERMOSTAT	1					
39	90105–06035	BOLT, FLANGE	2					
40	6S5–12578–00	HOSE 3	1					
41	90447–28008	TUBE (L850)	1					
42	90467–240A0	CLIP	1					

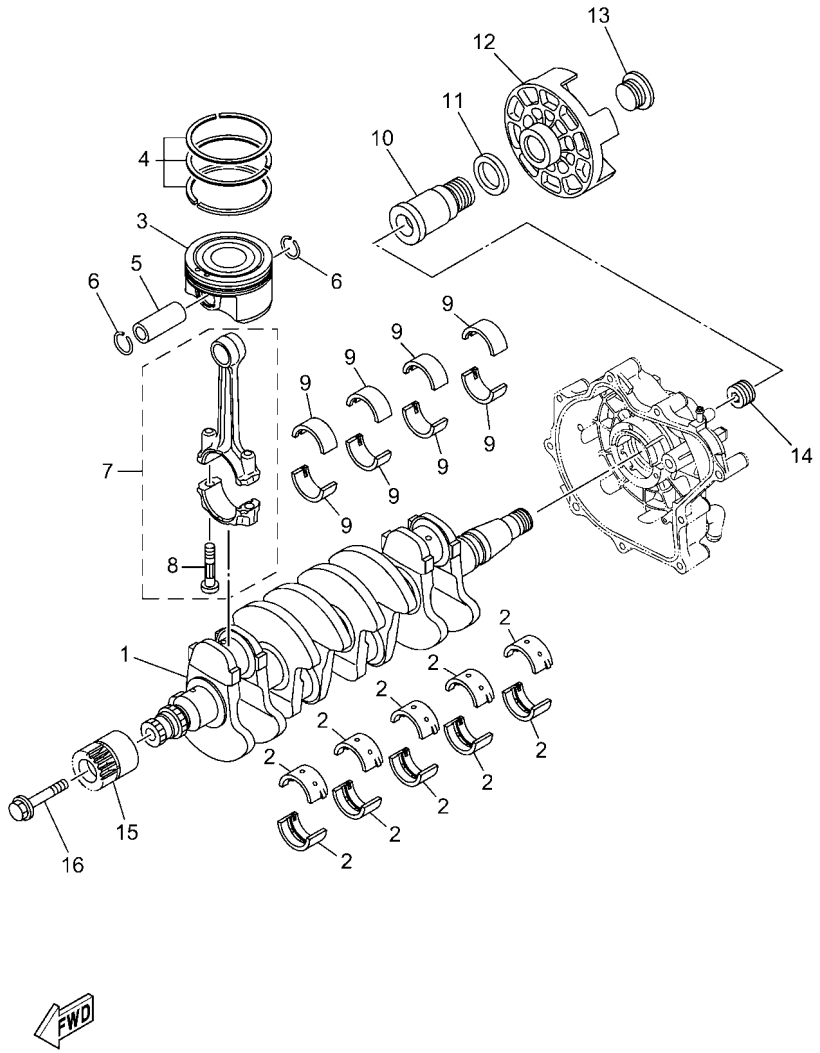

F7K1110-Z040

FIG. 4 CRANKSHAFT & PISTON

REF. NO.	PART NO.	DESCRIPTION	F7M7					REMARKS
1	6LE–11411–00	CRANKSHAFT	1					
2	6LE–11416–00	PLANE BEARING, CRANKSHAFT 1	10					UR BROWN
	6LE–11416–10	PLANE BEARING, CRANKSHAFT 1	10					UR BLACK
	6LE–11416–20	PLANE BEARING, CRANKSHAFT 1	10					UR BLUE
	6LE–11416–30	PLANE BEARING, CRANKSHAFT 1	10					UR GREEN
	6LE–11416–40	PLANE BEARING, CRANKSHAFT 1	10					UR YELLOW
3	6LE–11631–00–B0	PISTON (STD)	4					
4	6LE–11603–00	PISTON RING SET (STD)	4					
5	6ET–11633–00	PIN, PISTON	4					
6	93450–22174	CIRCLIP	8					
7	6S5–11650–10	CONNECTING ROD ASSY	4					
8	6S5–11654–10	.BOLT, CONNECTING ROD	2					
9	6LE–11656–00	PLANE BEARING, CONNECTING ROD	8					UR BLUE
	6LE–11656–10	PLANE BEARING, CONNECTING ROD	8					UR BLACK
	6LE–11656–20	PLANE BEARING, CONNECTING ROD	8					UR BROWN
	6LE–11656–30	PLANE BEARING, CONNECTING ROD	8					UR GREEN
10	6S5–17572–01	SHAFT, TRANSFER	1					
11	6S5–12289–00	WASHER	1					
12	6S5–45813–01–94	FLANGE, COUPLING	1					
13	6S5–17525–01	HOLDER 2	1					
14	6S5–11459–01	NUT, SPECIAL	1					
15	6BH–17586–11	GEAR, TRANSFER DRIVE	1					
16	6S5–17031–00	BOLT	1					

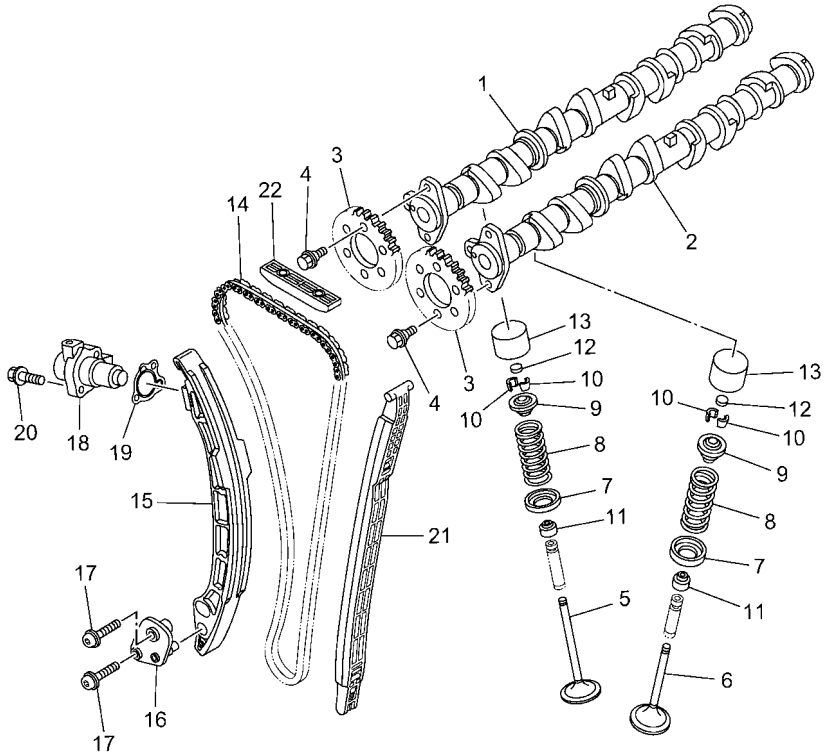

F7K8100-1050

FIG. 5 VALVE

REF. NO.	PART NO.	DESCRIPTION	F7M7					REMARKS
1	6LE–12171–00	CAMSHAFT 1	1					
2	6BH–12181–10	CAMSHAFT 2	1					
3	6ET–12176–00	SPROCKET, CAM CHAIN	2					
4	90105–07006	BOLT, FLANGE	4					
5	6S5–12111–01	VALVE, INTAKE	8					
6	6S5–12121–00	VALVE, EXHAUST	8					
7	6S5–12116–00	SEAT, VALVE SPRING	16					
8	6S5–12113–00	SPRING, VALVE INNER	16					
9	6S5–12117–00	RETAINER, VALVE SPRING	16					
10	3LD–12118–00	LOCK, VALVE SPRING RETAINER	32					
11	51Y–12119–00	SEAL, VALVE STEM	16					
12	3LD–12168–00	PAD, ADJUSTING (1.20)	16					UR
	3LD–12168–20	PAD, ADJUSTING (1.25)	16					UR
	3LD–12168–40	PAD, ADJUSTING (1.30)	16					UR
	3LD–12168–60	PAD, ADJUSTING (1.35)	16					UR
	3LD–12168–80	PAD, ADJUSTING (1.40)	16					UR
	3LD–12168–A0	PAD, ADJUSTING (1.45)	16					UR
	3LD–12168–F0	PAD, ADJUSTING (1.50)	16					UR
	3LD–12168–H1	PAD, ADJUSTING (1.55)	16					UR
	3LD–12168–K1	PAD, ADJUSTING (1.60)	16					UR
	3LD–12168–M1	PAD, ADJUSTING (1.65)	16					UR
	3LD–12168–R1	PAD, ADJUSTING (1.70)	16					UR
	3LD–12168–U1	PAD, ADJUSTING (1.75)	16					UR
	3LD–12168–W1	PAD, ADJUSTING (1.80)	16					UR
	3LD–12168–Y1	PAD, ADJUSTING (1.85)	16					UR
	3LD–12169–11	PAD, ADJUSTING (1.90)	16					UR
	3LD–12169–31	PAD, ADJUSTING (1.95)	16					UR

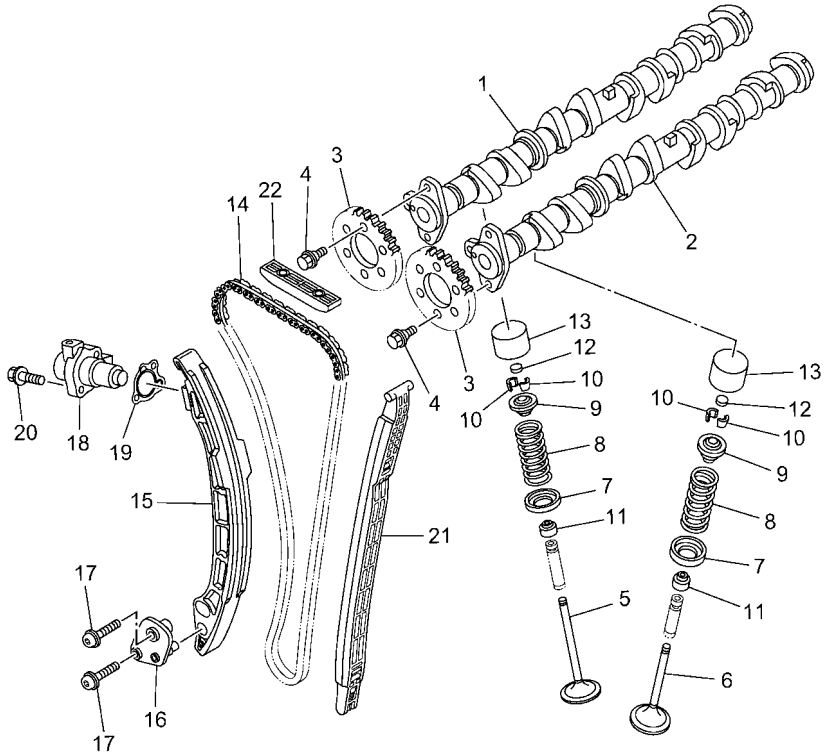

F7K8100-1050

FIG. 5 VALVE

REF. NO.	PART NO.	DESCRIPTION	F7M7					REMARKS
12	3LD–12169–50	PAD, ADJUSTING (2.00)	16					UR
	3LD–12169–70	PAD, ADJUSTING (2.05)	16					UR
	3LD–12169–90	PAD, ADJUSTING (2.10)	16					UR
	3LD–12169–E0	PAD, ADJUSTING (2.15)	16					UR
	3LD–12169–G0	PAD, ADJUSTING (2.20)	16					UR
	3LD–12169–J0	PAD, ADJUSTING (2.25)	16					UR
	3LD–12169–L0	PAD, ADJUSTING (2.30)	16					UR
13	6S5–12153–00	LIFTER, VALVE	16					
14	94591–74152	CHAIN	1					
15	6ET–12252–00	DAMPER, CHAIN 2	1					
16	6BH–12279–00	PLATE	1					
17	92014–06030	BOLT, BUTTON HEAD	2					
18	6LE–12210–00	TENSIONER ASSY, CAM CHAIN	1					
19	6LE–12213–00	GASKET, TENSIONER CASE	1					
20	91380–06025	BOLT	2					
21	6ET–12251–00	DAMPER, CHAIN 1	1					
22	6BH–12241–00	GUIDE, STOPPER 2	1					

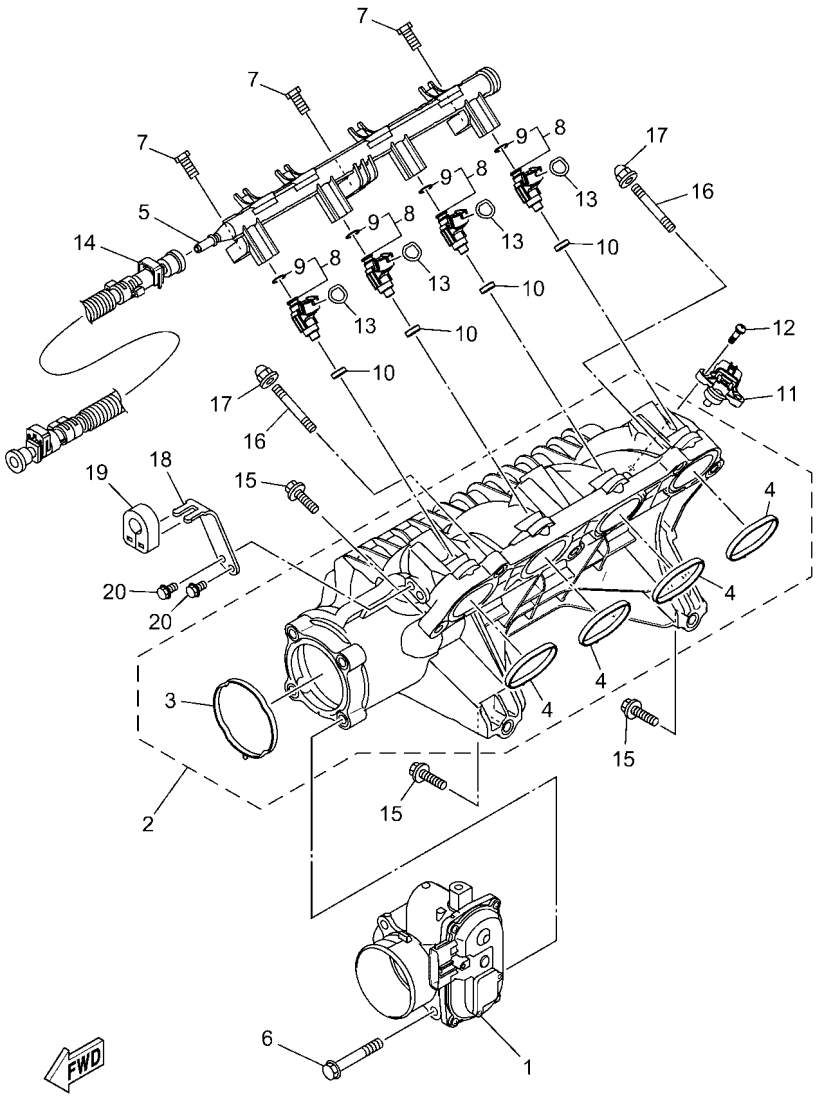

F7K1110-Z060

FIG. 6 INTAKE 1

REF. NO.	PART NO.	DESCRIPTION	F7M7					REMARKS
1	6LE–13750–01	THROTTLE BODY ASSY	1					
2	6LE–13641–00	MANIFOLD, INTAKE 1	1					
3	6LE–14156–00	.GASKET, INSULATING	1					
4	6LE–14126–00	.GASKET	4					
5	6LE–12880–00	DELIVERY PIPE	1					
6	90105–08243	BOLT, FLANGE	4					
7	6CS–14446–00	BOLT	3					
8	6S5–13761–10	INJECTOR	4					
9	68V–1416A–00	.O-RING	1					
10	8FP–13556–10	GASKET, MANIFOLD	4					
11	6LE–83688–00	SENSOR ASSY	1					
12	6D3–81147–00	SCREW 3	2					
13	93210–13003	O-RING	4					
14	6AN–2450B–10	FUEL HOSE ASSY	1					
15	97513–08535	BOLT, WITH WASHER	5					
16	90116–08032	BOLT, STUD	2					
17	90176–08080	NUT, CAP	2					
18	6LE–14572–00	PLATE, STAY	1					
19	6CS–14445–01	GROMMET	1					
20	95E33–06012	BOLT, FLANGE D/R (SMALL HEAD)	2					

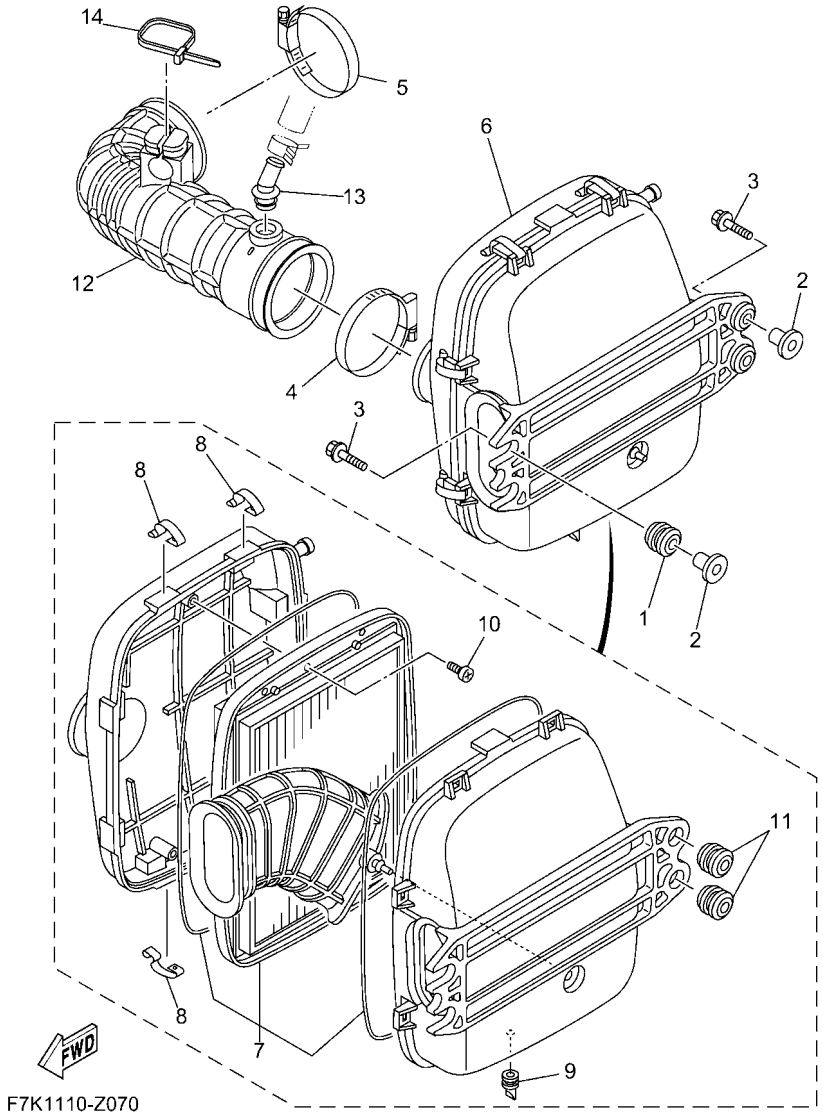

FIG. 7 INTAKE 2

REF. NO.	PART NO.	DESCRIPTION	F7M7					REMARKS
1	90480–22M15	GROMMET	2					
2	90387–08M37	COLLAR	4					
3	90119–08187	BOLT, WITH WASHER	4					
4	90450–90002	HOSE CLAMP ASSY	1					
5	90450–90002	HOSE CLAMP ASSY	1					
6	6S5–E4410–02	AIR CLEANER ASSY.	1					
7	6S5–E4451–01	.ELEMENT, AIR CLEANER	1					
8	6S5–E4436–00	.HOOK	8					
9	6S5–G2717–00	.RUBBER, SEAL 2	1					
10	97780–60516	.SCREW, TAPPING	3					
11	90480–22801	.GROMMET	2					
12	6LE–E4419–00	PIPE	1					
13	6BH–R1142–10	CONNECTION	1					
14	90464–40825	CLAMP	1					

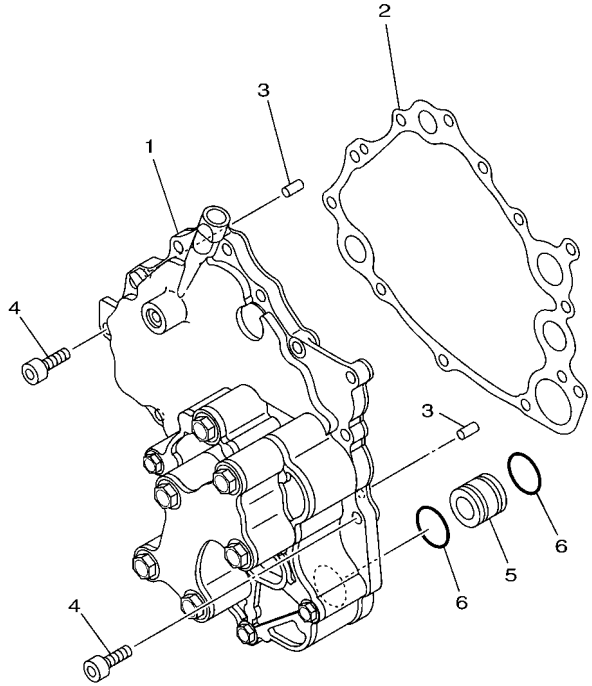

F2M7100-L080

FIG. 8 OIL PUMP

REF. NO.	PART NO.	DESCRIPTION	F7M7					REMARKS
1	6BH–13300–12	OIL PUMP ASSY	1					
2	6S5–13563–00	GASKET	1					
3	93606–12019	PIN, DOWEL	2					
4	90110–06404	BOLT, HEXAGON SOCKET HEAD	12					
5	6S5–13446–10	CONNECTOR	1					
6	93210–21631	O-RING	2					

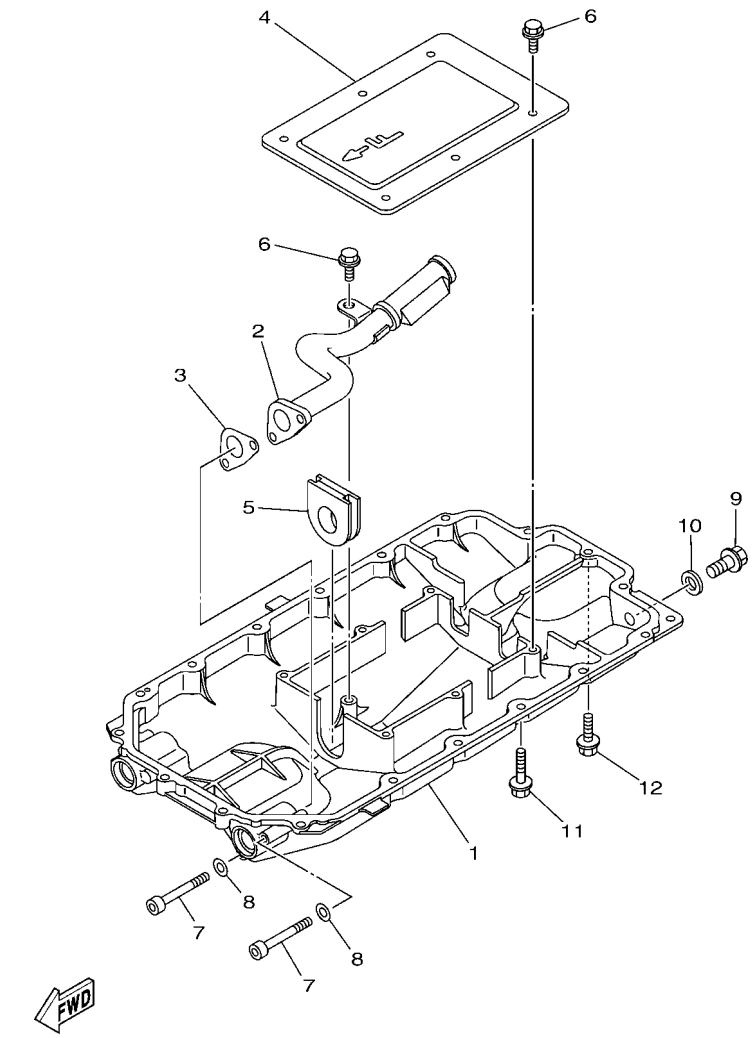

F2W1100-P090

FIG. 9 OIL PAN

REF. NO.	PART NO.	DESCRIPTION	F7M7					REMARKS
1	6S5–1310A–25	PAN, OIL	1					
2	6S5–13405–11	OIL PIPE COMP. 1	1					
3	6S5–13477–00	GASKET	1					
4	6S5–13317–10	PLATE, BAFFLE	1					
5	6S5–15486–10	GROMMET	1					
6	95817–06014	BOLT, FLANGE	7					
7	91314–06060	BOLT, HEXAGON SOCKET HEAD	2					
8	90201–06028	WASHER, PLATE	2					
9	95814–08020	BOLT, FLANGE	1					
10	90430–08209	GASKET	1					
11	95E34–06035	BOLT, FLANGE DEEP RECESS	17					
12	95E34–06020	BOLT, FLANGE DEEP RECESS	1					

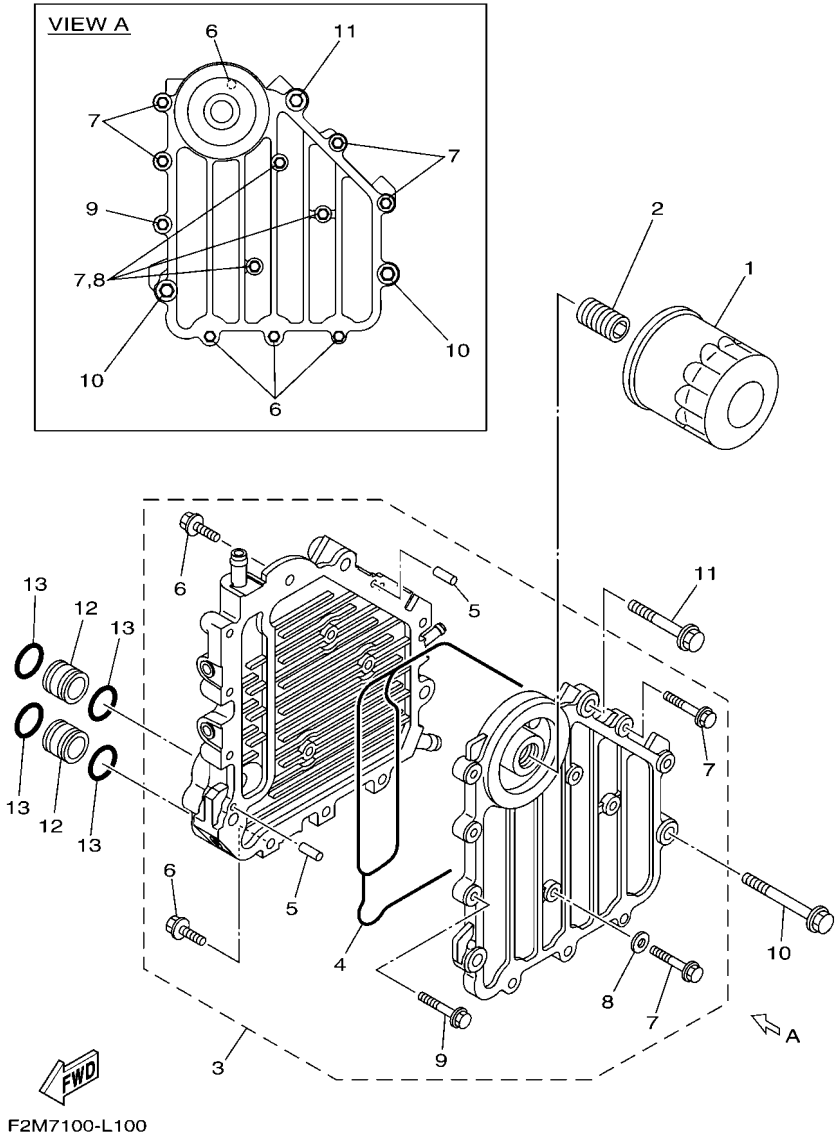

FIG. 10 OIL COOLER

REF. NO.	PART NO.	DESCRIPTION	F7M7					REMARKS
1	69J–13440–05	ELEMENT ASSY, OIL CLEANER	1					
2	6S5–12858–00	BOLT, UNION	1					
3	6BH–13470–21	OIL COOLER ASSY	1					
4	6BH–13556–00	.GASKET, MANIFOLD	1					
5	93604–10M03	.PIN, DOWEL	2					
6	90105–06184	.BOLT, FLANGE	4					
7	90105–06185	.BOLT, FLANGE	7					
8	90430–06232	.GASKET	3					
9	90105–08054	.BOLT, FLANGE	1					
10	90105–08169	BOLT, FLANGE	2					
11	90105–08170	BOLT, FLANGE	1					
12	60E–13446–00	CONNECTOR	2					
13	93210–18322	O-RING	4					

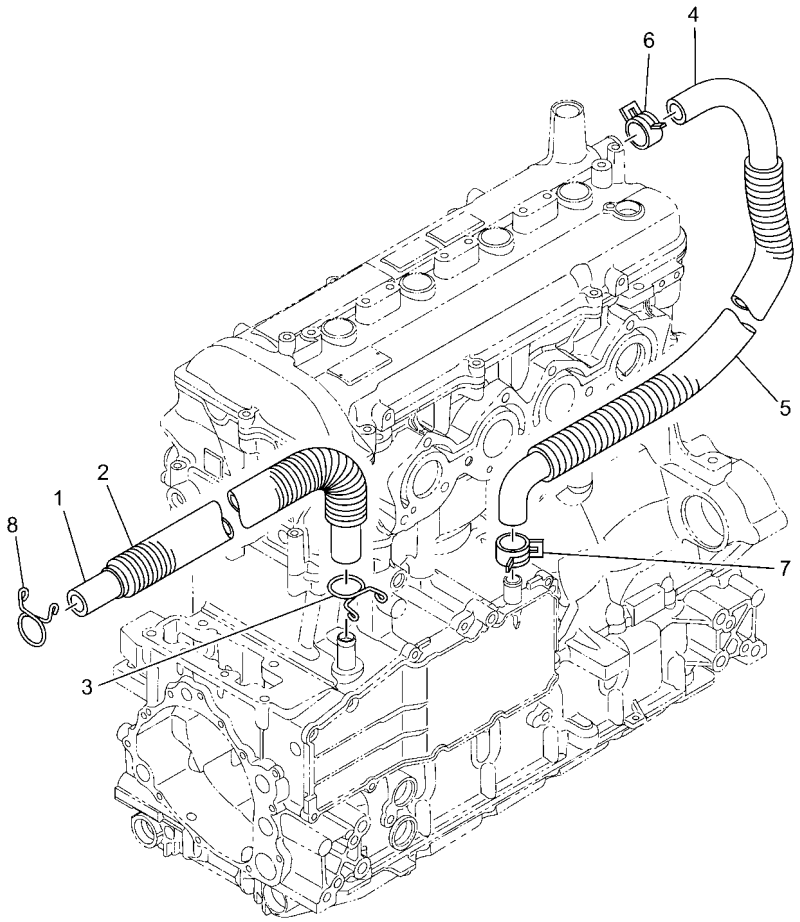

F7K1110-Z110

FIG. 11 BREATHER OIL

REF. NO.	PART NO.	DESCRIPTION	F7M7					REMARKS
1	6S5–11166–10	PIPE, BREATHER 1	1					
2	90447–22015	TUBE (L410)	1					
3	90467–190A0	CLIP	1					
4	6S5–11167–10	PIPE, BREATHER 2	1					
5	90447–22016	TUBE (L490)	1					
6	90467–240A0	CLIP	1					
7	90467–200A3	CLIP	1					
8	90467–190A0	CLIP	1					

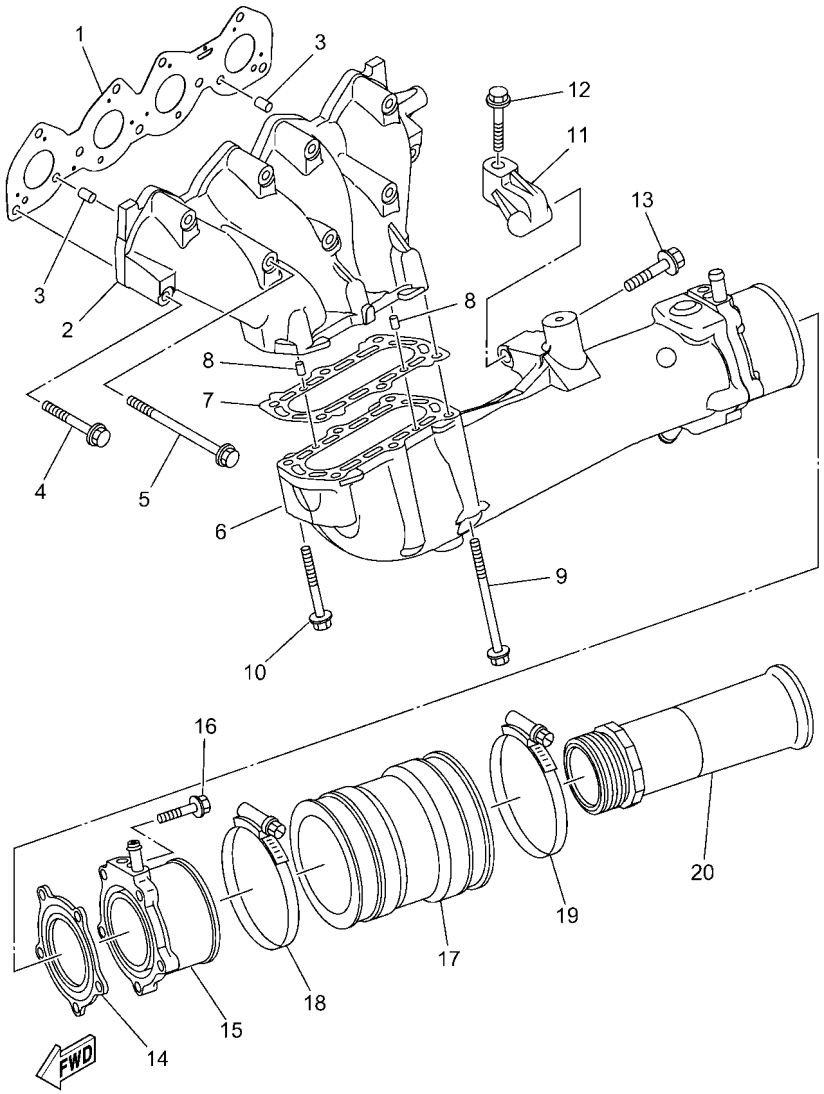

F7K1110-Z120

FIG. 12 EXHAUST 1

REF. NO.	PART NO.	DESCRIPTION	F7M7					REMARKS
1	6LE–14613–00	GASKET, EXHAUST PIPE	1					
2	6LE–14711–00	MUFFLER 1	1					
3	93608–16M16	PIN, DOWEL	2					
4	90119–08034	BOLT, WITH WASHER	6					
5	90119–08097	BOLT, WITH WASHER	3					
6	6LE–14721–00	MUFFLER 2	1					
7	6S5–14739–00	GASKET, MUFFLER DAMPER 1	1					
8	93606–12019	PIN, DOWEL	2					
9	90119–08097	BOLT, WITH WASHER	4					
10	90119–08034	BOLT, WITH WASHER	2					
11	6S5–14771–00	STAY, MUFFLER 1	1					
12	90119–08096	BOLT, WITH WASHER	1					
13	90119–10076	BOLT, WITH WASHER	1					
14	6BH–14749–00	GASKET, MUFFLER DAMPER 2	1					
15	6BH–14784–01	PIPE, TAIL	1					
16	95E34–08035	BOLT, FLANGE DEEP RECESS	5					
17	6S5–E4752–01	PIPE, OUTLET	1					
18	90450–99808	HOSE CLAMP ASSY	1					
19	90450–99809	HOSE CLAMP ASSY	1					
20	6CS–1475A–00	PIPE 1	1					

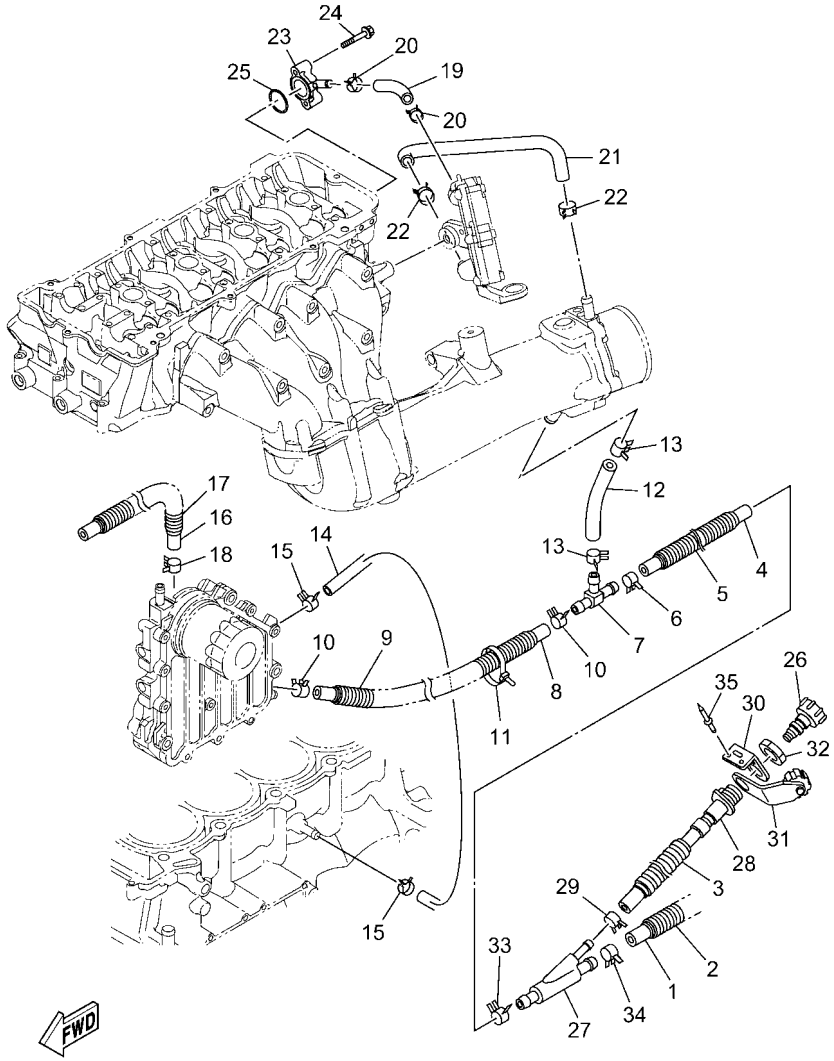

F7M1110-Z130

FIG. 13 EXHAUST 2

REF. NO.	PART NO.	DESCRIPTION	F7M7					REMARKS
1	90445–21806	HOSE (L250)	1					
2	F2T–U773D–20	TUBE	1					
3	90447–19801	TUBE (L485)	1					
4	6S5–1243E–01	HOSE 2	1					
5	F2T–U773D–20	TUBE	1					
6	90467–200A3	CLIP	1					
7	6BH–12584–00	JOINT, HOSE 3	1					
8	90445–18012	HOSE (L400)	1					
9	90447–19005	TUBE (L260)	1					
10	90467–160A0	CLIP	2					
11	90464–35132	CLAMP	1					
12	6S5–12589–01	HOSE 6	1					
13	90467–200A3	CLIP	2					
14	6LE–1244H–00	HOSE 5	1					
15	90467–141A3	CLIP	2					
16	6CN–12588–00	HOSE 5	1					
17	90447–19021	TUBE (L860)	1					
18	90467–160A0	CLIP	1					
19	90445–16027	HOSE (L100)	1					
20	90467–141A3	CLIP	2					
21	6LE–12576–00	HOSE 1	1					
22	90467–160A0	CLIP	2					
23	6LE–1246A–00	COVER 1	1					
24	90105–06035	BOLT, FLANGE	2					
25	93210–30M31	O-RING	1					
26	67X–E2590–00	CONDUCTION ASSY	1					FOR CAN
	67X–E2590–10	CONDUCTION ASSY	1					FOR EUR

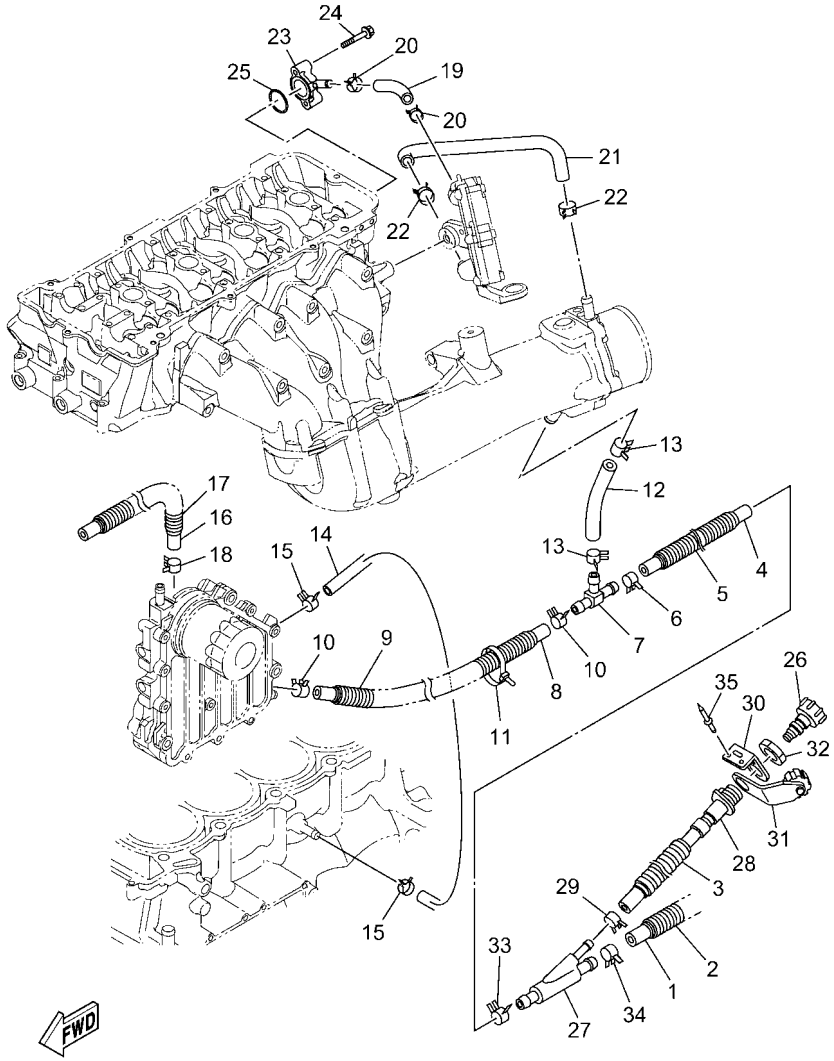

F7M1110-Z130

FIG. 13 EXHAUST 2

REF. NO.	PART NO.	DESCRIPTION	F7M7					REMARKS
27	60E–12581–00	JOINT, HOSE 1	1					
28	63M–12580–10	JOINT ASSY	1					
29	90467–150A5	CLIP	1					
30	60E–12443–00	STAY	1					
31	6EY–84385–00	CAP,1	1					
32	EU0–61652–00	NUT	1					
33	90467–200A3	CLIP	1					
34	90467–200A3	CLIP	1					
35	90267–489U1	RIVET,BLIND	2					

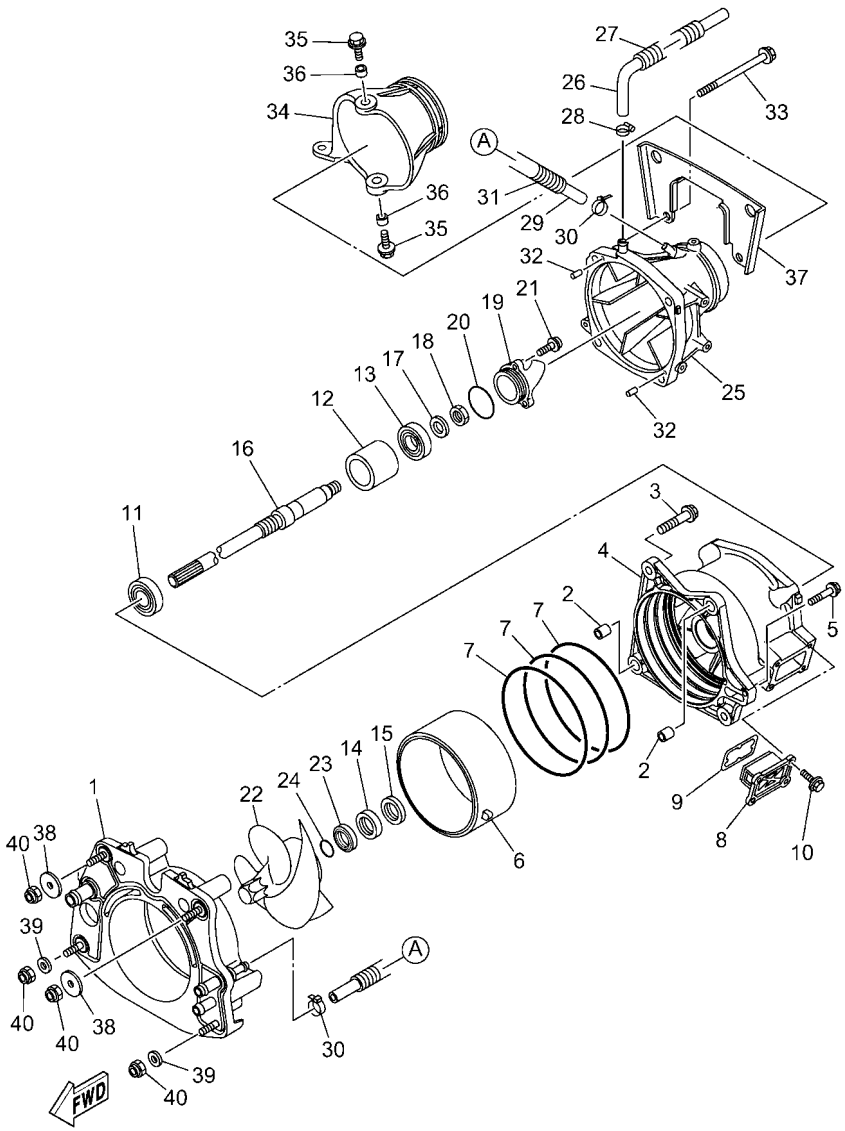

FIG. 14 JET UNIT 1

REF. NO.	PART NO.	DESCRIPTION	F7M7					REMARKS
1	6CS–G5831–21	PLATE, TRANSOM	1					
2	99590–14016	PIN, DOWEL	2					
3	90119–10810	BOLT, WITH WASHER	4					
4	6HM–R1312–10	HOUSING, IMPELLER	1					
5	90119–06893	BOLT, WITH WASHER	1					
6	6HH–R1337–00	SLEEVE, IMPELLER	1					
7	93211–65801	O-RING	3					
8	6GN–G6882–00	FILTER	1					
9	66V–42414–00	O-RING	1					
10	90119–06889	BOLT, WITH WASHER	4					
11	93306–206Y7	BEARING	1					
12	6CS–G5538–00	SPACER 1	1					
13	93306–355Y0	BEARING	1					
14	93102–31009	OIL SEAL	1					
15	93101–31001	OIL SEAL	1					
16	6S5–G5511–00	SHAFT, DRIVE	1					
17	92990–20600	WASHER	1					
18	95312–20700	NUT	1					
19	6AN–R1326–00	CAP	1					
20	93210–54010	O-RING	1					
21	90110–06822	BOLT, HEXAGON SOCKET HEAD	3					
22	6LE–R1321–00	IMPELLER	1					
23	6BH–R1348–00	SPACER	1					
24	93210–30611	O-RING	1					
25	6EX–R1318–01	NOZZLE	1					
26	6CN–U72M2–00	HOSE 1	1					
27	90446–24M46	HOSE (L175)	1					

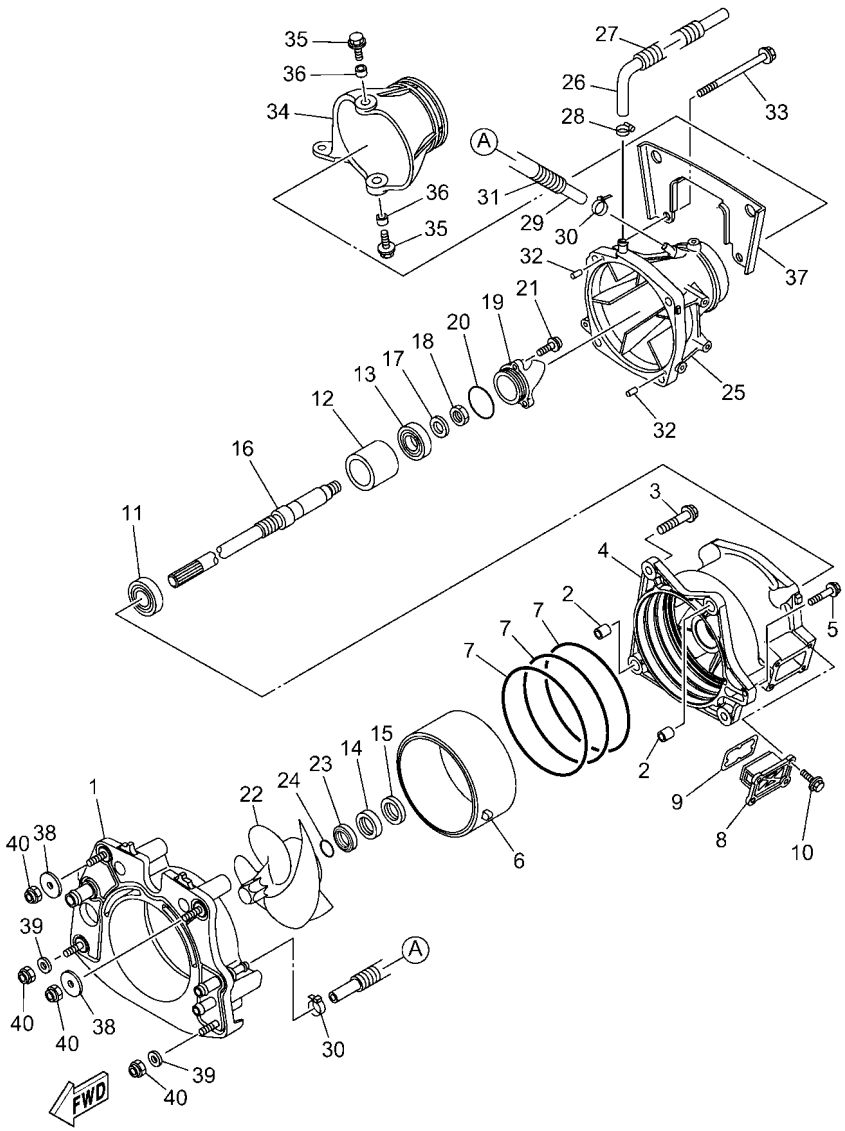

F7M1110-Z140

FIG. 14 JET UNIT 1

REF. NO.	PART NO.	DESCRIPTION	F7M7					REMARKS
28	90601–118UF	BAND, HOSE 18	1					
29	90445–14807	HOSE (L355)	1					
30	90465–11829	CLAMP	2					
31	90446–20MF5	HOSE (L320)	1					
32	93606–12019	PIN, DOWEL	2					
33	90119–10810	BOLT, WITH WASHER	4					
34	6EX–R1313–00	NOZZLE, DEFLECTOR	1					
35	90119–08840	BOLT, WITH WASHER	2					
36	90387–08M06	COLLAR	2					
37	6EY–R1959–00	BRACKET	1					
38	F1S–U725E–01	WASHER	2					
39	90201–10801	WASHER, PLATE	2					
40	9572R–10300	NUT, NYLON	4					

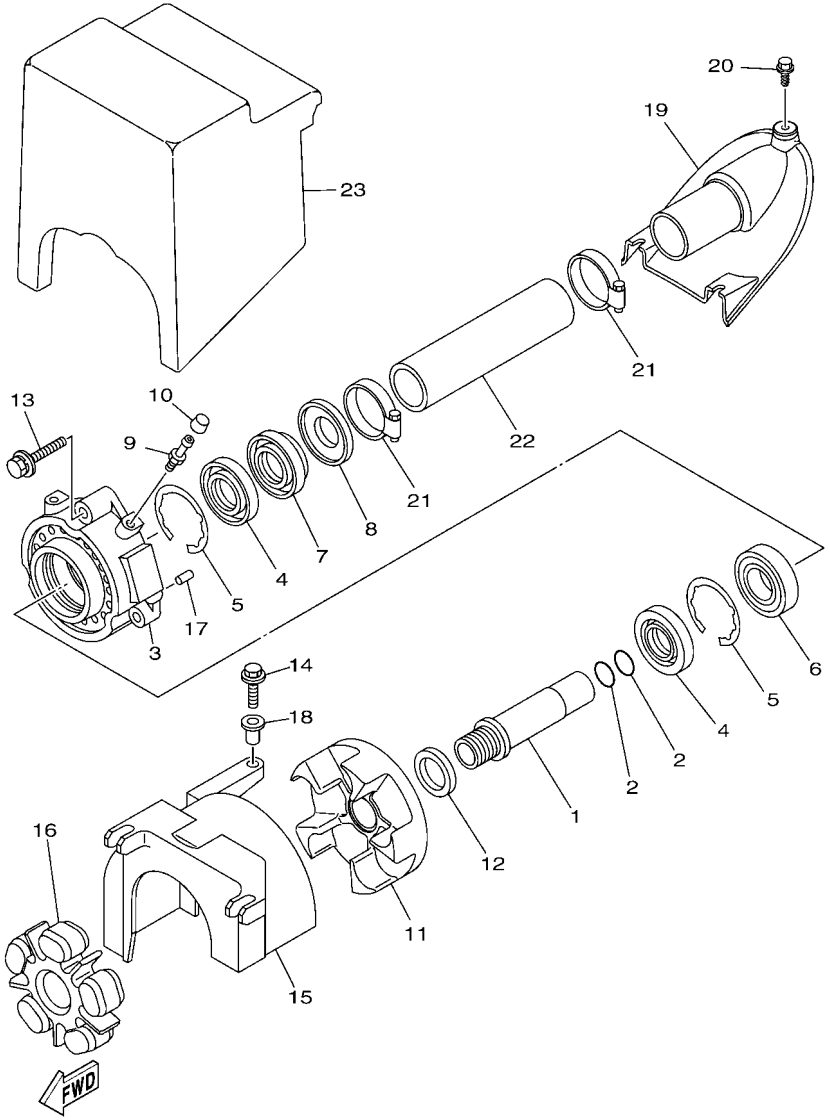

F2WB100-T150

FIG. 15 JET UNIT 2

REF. NO.	PART NO.	DESCRIPTION	F7M7					REMARKS
1	6S5–R1323–00	SLEEVE	1					
2	93210–22MF1	O-RING	2					
3	6S5–G5332–00	HOUSING, BEARING	1					
4	93102–29008	OIL SEAL	2					
5	99009–62500	CIRCLIP	2					
6	93306–206Y8	BEARING	1					
7	93102–29009	OIL SEAL	1					
8	6ET–45613–00	WASHER, THRUST	1					
9	93700–06M03	NIPPLE, GREASE	1					
10	663–45119–00	CAP, GREASE NIPPLE	1					
11	6S5–G5593–00	FLANGE, COUPLING 1	1					
12	6ET–E2289–00	WASHER	1					
13	90119–089UU	BOLT, WITH WASHER	3					
14	90119–06891	BOLT, WITH WASHER	1					
15	6S5–R1381–01	COVER	1					
16	6BH–4581J–01	RUBBER SHAFT COUPLING	1					
17	93606–12019	PIN, DOWEL	2					
18	90387–06289	COLLAR	1					
19	F2N–U883E–00	JOINT, PIPE	1					
20	90109–06832	BOLT	3					
21	90601–155U4	BAND, HOSE 55	2					
22	F2M–U883B–00	PIPE 1	1					
23	F1K–U892D–00	FLOTATION, STERN	1					

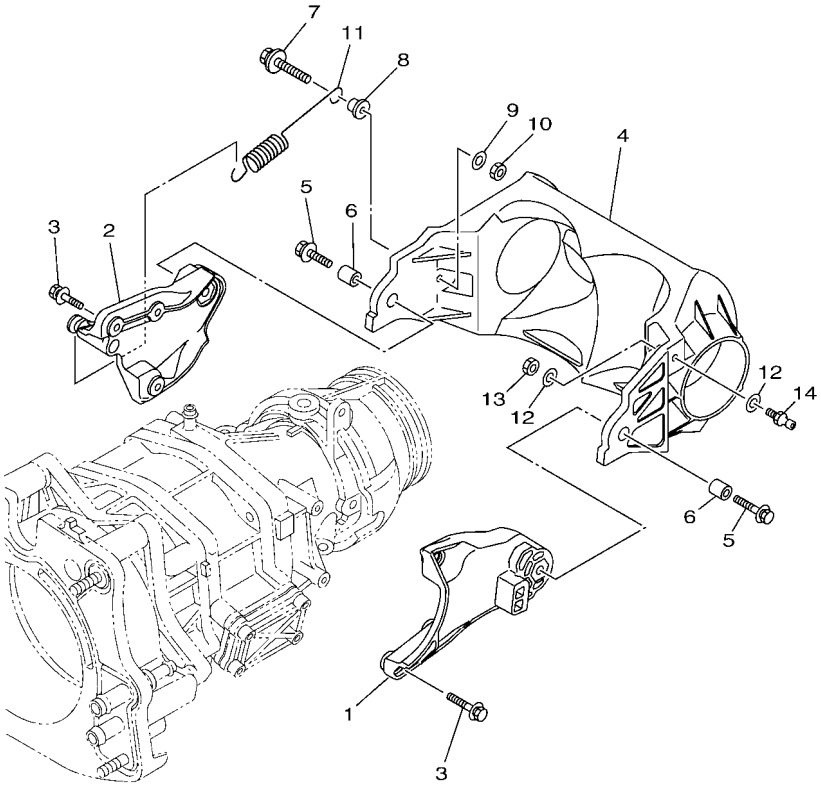

F2TS100-T160

FIG. 16 JET UNIT 3

REF. NO.	PART NO.	DESCRIPTION	F7M7					REMARKS
1	6ET–R1341–10	BRACKET 1	1					
2	6ET–R1342–10	BRACKET 2	1					
3	90119–06891	BOLT, WITH WASHER	6					
4	6ET–R1314–10	GATE, REVERSE	1					
5	90119–08840	BOLT, WITH WASHER	2					
6	90387–08M30	COLLAR	2					
7	90119–069UX	BOLT, WITH WASHER	1					
8	90387–06319	COLLAR	1					
9	90201–06801	WASHER, PLATE	1					
10	95380–06600	NUT, HEXAGON	1					
11	6S5–R2358–00	SPRING, RETAINER	1					
12	90201–06801	WASHER, PLATE	2					
13	95380–06600	NUT, HEXAGON	1					
14	6GA–U1461–10	STUD, JOINT BALL	1					

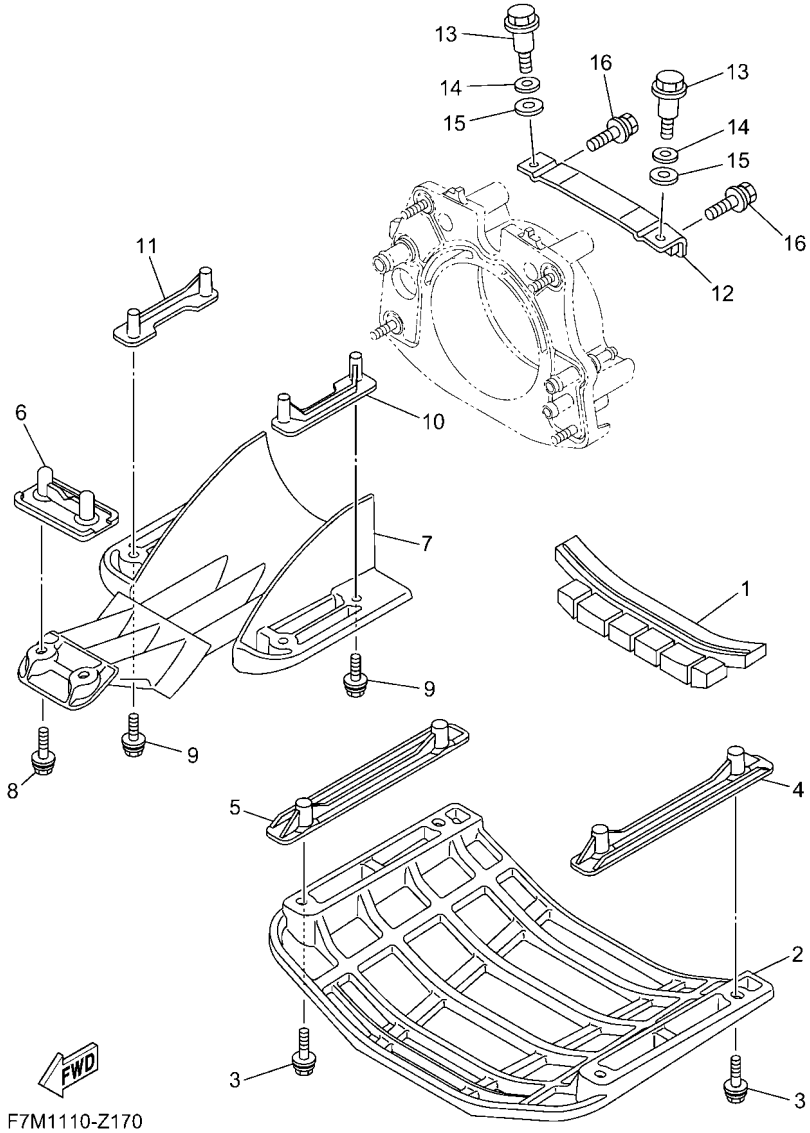

FIG. 17 JET UNIT 4

REF. NO.	PART NO.	DESCRIPTION	F7M7					REMARKS
1	F2X–U72C0–00	SPACER	1					
2	F4N–U273B–00	PLATE 2	1					
3	F4L–U3222–01	BOLT	4					
4	F2X–U8572–00	BRACKET 2	1					
5	F2X–U8572–00	BRACKET 2	1					
6	F2S–U8577–00	BRACKET, 3	1					
7	F4P–U72B7–00	SCREEN, INTAKE	1					
8	90119–08823	BOLT, WITH WASHER	2					
9	90119–08827	BOLT, WITH WASHER	4					
10	F3P–U8571–00	BRACKET 1	1					
11	F3P–U8571–00	BRACKET 1	1					
12	F2C–U7557–01	BRACKET	1					
13	90109–08041	BOLT	2					
14	92990–12200	WASHER, PLAIN	2					
15	90430–12002	GASKET	2					
16	90119–089U7	BOLT, WITH WASHER	2					

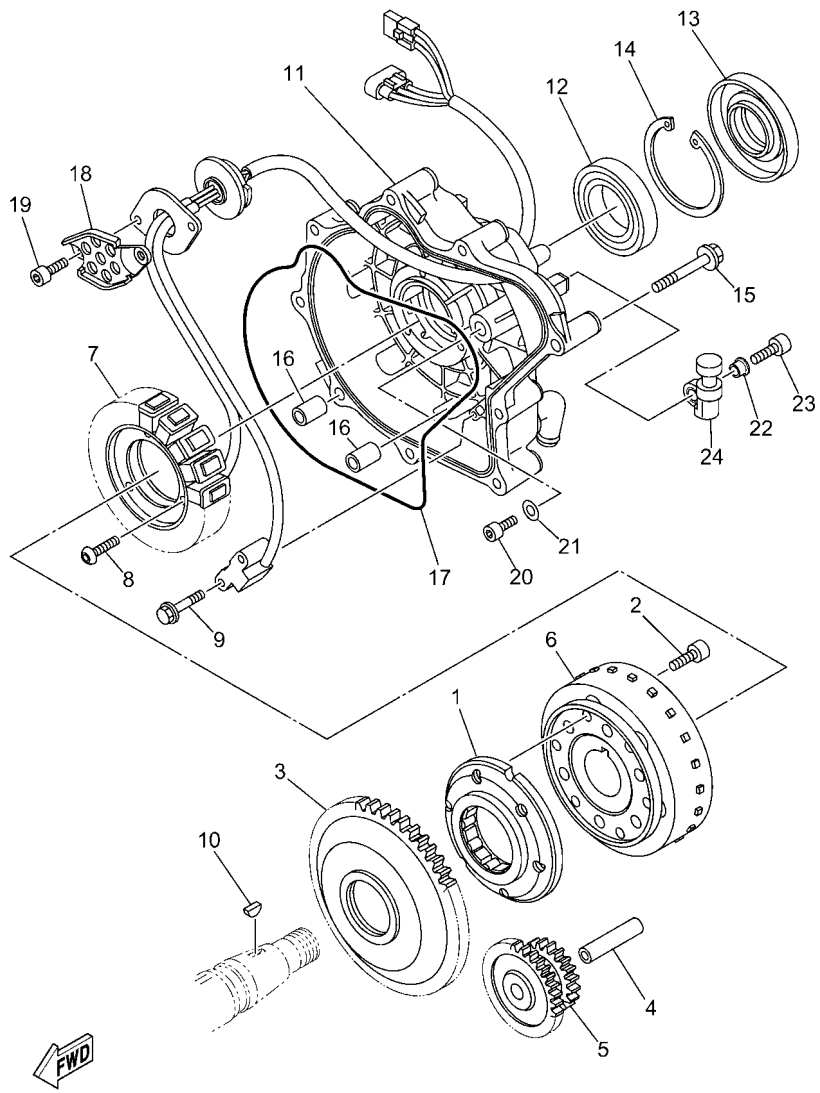

F7K1110-Z180

FIG. 18 GENERATOR

REF. NO.	PART NO.	DESCRIPTION	F7M7					REMARKS
1	6S5–15590–00	STARTER ONE-WAY ASSY	1					
2	90110–08212	BOLT, HEXAGON SOCKET HEAD	6					
3	6LE–15515–00	GEAR 3	1					
4	6S5–15521–00	SHAFT 1	1					
5	6S5–15517–00	GEAR, IDLER 2	1					
6	6LE–81450–00	ROTOR ASSY	1					
7	6ET–81410–01	STATOR ASSY	1					
8	90149–06229	SCREW	3					
9	97513–05514	BOLT, WITH WASHER	2					
10	90280–03047	KEY, WOODRUFF	1					
11	6S5–81337–31	COVER, FLYWHEEL	1					
12	93306–00809	BEARING	1					
13	6LE–81167–00	OIL SEAL	1					
14	99009–72500	CIRCLIP	1					
15	90105–08249	BOLT, FLANGE	9					
16	99530–10114	PIN, DOWEL	2					
17	6S5–81168–00	O-RING	1					
18	6S5–81328–00	CLAMP	1					
19	91317–06014	BOLT, HEXAGON SOCKET HEAD	2					
20	91317–05010	BOLT, HEXAGON SOCKET HEAD	1					
21	90201–052E8	WASHER, PLATE	1					
22	90387–06M05	COLLAR	2					
23	91380–06020	BOLT	2					
24	6S5–81364–11	GROMMET	2					

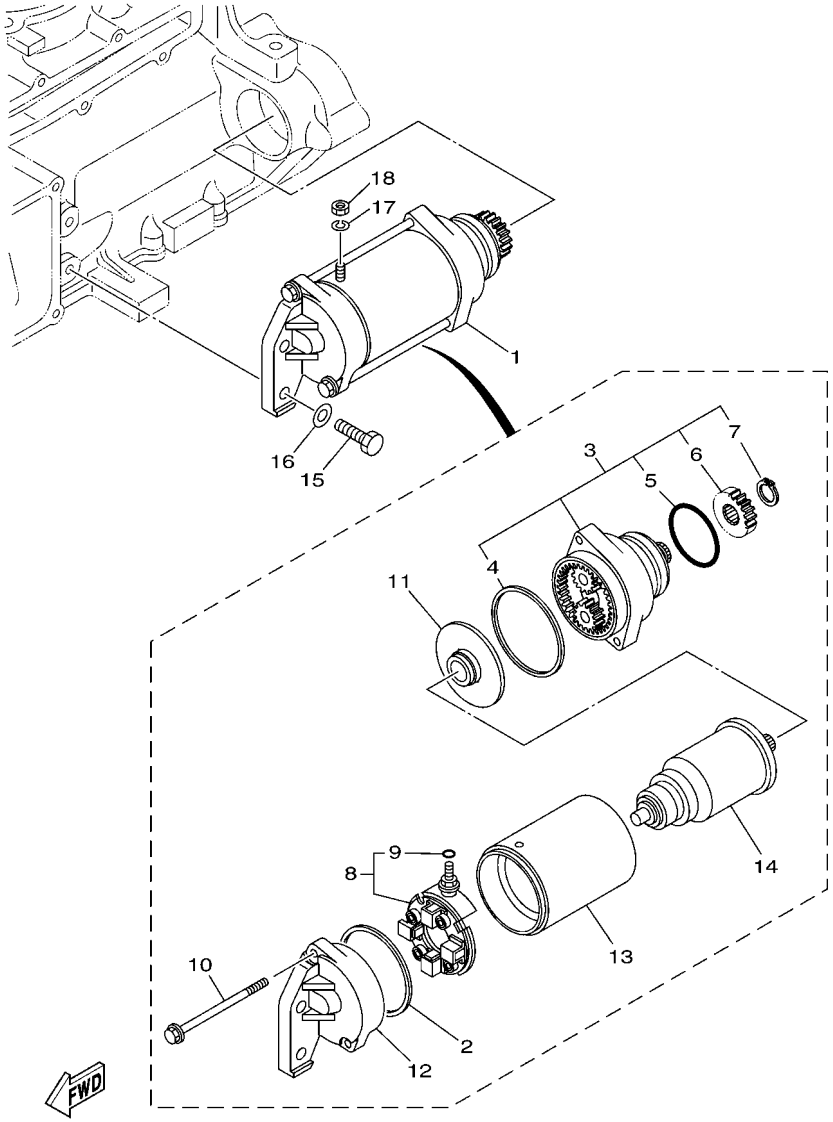

F1W1100-G200

FIG. 19 STARTING MOTOR

REF. NO.	PART NO.	DESCRIPTION	F7M7					REMARKS
1	6S5–81800–00	STARTING MOTOR ASSY	1					
2	11H–81844–00	.GASKET	1					
3	6S5–81830–00	.FRONT BRACKET ASSY	1					
4	4G0–81844–00	..GASKET	1					
5	1J7–81847–60	..O-RING	1					
6	5EL–15511–00	..GEAR, STARTING MOTOR	1					
7	93410–12003	..CIRCLIP	1					
8	6S5–81840–00	.BRUSH HOLDER ASSY	1					
9	3TB–81847–00	..O-RING	1					
10	6S5–81826–00	.BOLT	2					
11	5EL–81845–00	.PLATE	1					
12	6S5–81820–00	.REAR BRACKET ASSY	1					
13	6S5–81810–00	.STATOR ASSY	1					
14	5A8–81850–10	.ARMATURE ASSY	1					
15	97013–08030	BOLT	2					
16	92903–08600	WASHER, PLATE	2					
17	92990–06100	WASHER, SPRING	1					
18	95380–06700	NUT	1					

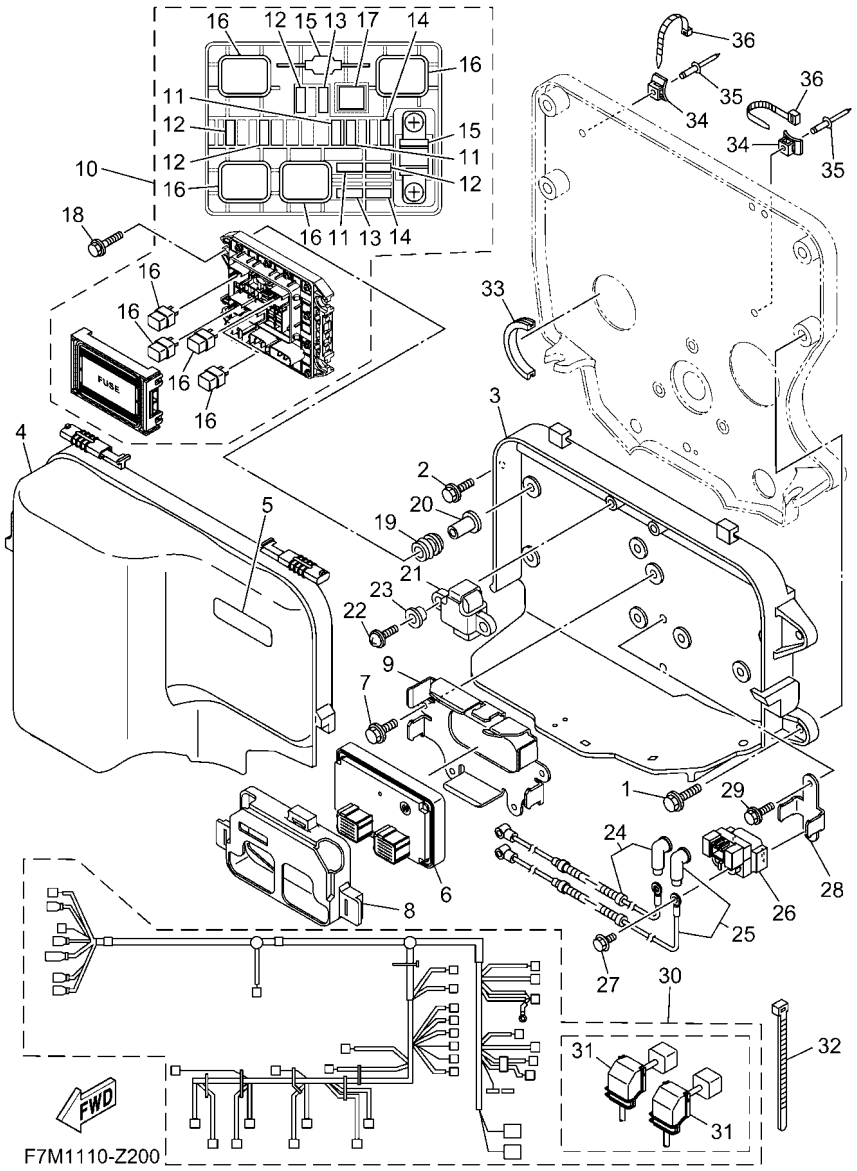

FIG. 20 ELECTRICAL 1

REF. NO.	PART NO.	DESCRIPTION	F7M7					REMARKS
1	90119–089UT	BOLT, WITH WASHER	2					
2	90119–089UT	BOLT, WITH WASHER	2					
3	6CS–81845–11	PLATE	1					
4	6S5–81942–21	COVER	1					
5	60E–83627–00	LABEL, CAUTION 7	1					
6	6ME–8591A–00	ENGINE CONTROL UNIT ASSY	1					
7	95814–06012	BOLT, FLANGE	4					
8	6EY–8591S–00	GROMMET, ECU	1					
9	6ET–81948–00	BRACKET	1					
10	6EX–82170–02	FUSE BOX ASSY	1					
11	67F–82151–30	.FUSE (3A)	3					
12	67F–82151–40	.FUSE (10A)	4					
13	67F–82151–00	.FUSE (20A)	2					
14	67F–82151–10	.FUSE (30A)	2					
15	6EX–82151–00	.FUSE (50A)	2					
16	6EX–8195A–00	.RELAY ASSY	4					
17	6EX–2812A–00	.PULLER, FUSE	1					
18	90119–06311	BOLT, WITH WASHER	4					
19	6A0–82317–01	DAMPER, IGNITION COIL	4					
20	90387–06119	COLLAR	4					
21	6ET–82576–00	SENSOR, LEAN ANGLE	1					
22	97780–60025	SCREW, TAPPING	2					
23	90387–06M05	COLLAR	2					
24	6JP–82115–00	WIRE, PLUS LEAD	1					
25	6CS–82117–00	WIRE, LEAD	1					
26	1B7–81940–00	STARTER RELAY ASSY (2768102-A)	1					
27	97E95–06612	BOLT, HEXAGON W/W DEEP RECESS	2					

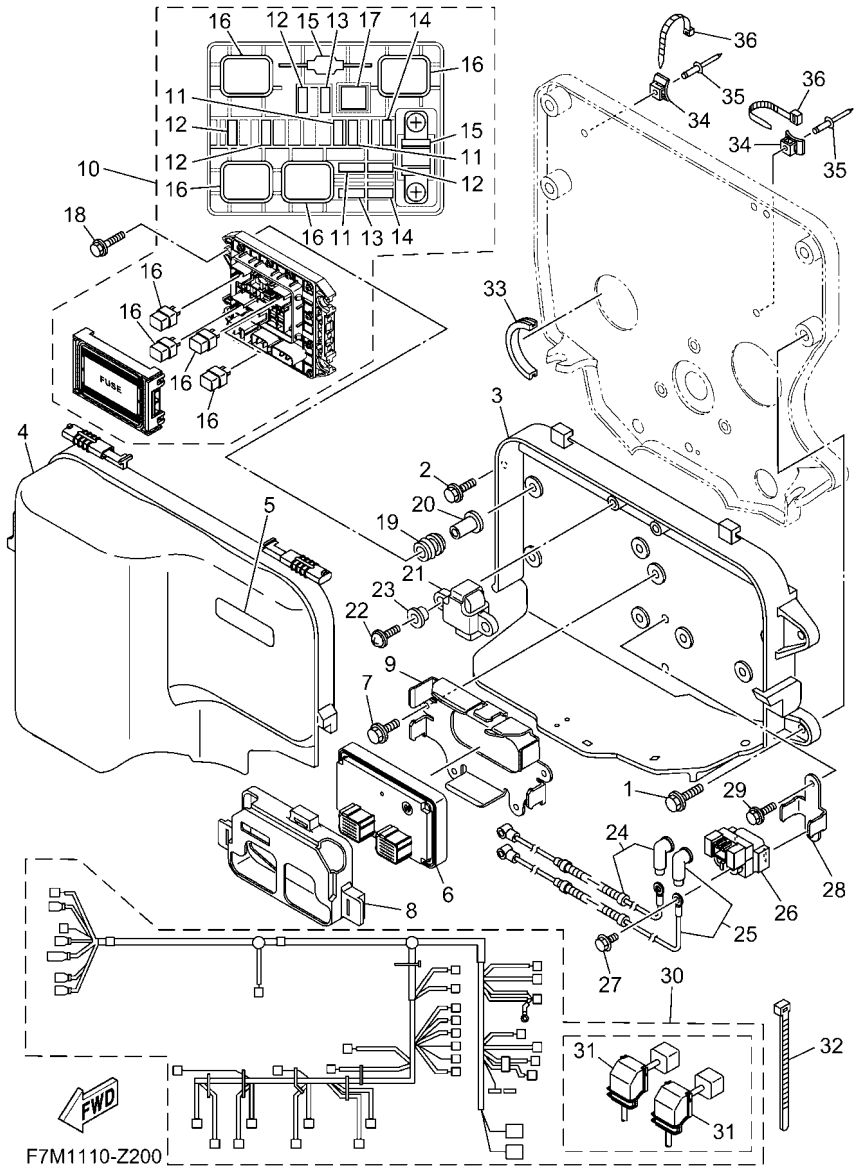

FIG. 20 ELECTRICAL 1

REF. NO.	PART NO.	DESCRIPTION	F7M7					REMARKS
28	6CS–81953–00	STAY, RELAY	1					
29	95814–06012	BOLT, FLANGE	2					
30	6MD–8259L–02	WIRE HARNESS ASSY 1	1					
31	6EM–82599–00	.COVER, CONNECTOR	2					
32	90465–14M66	CLAMP	1					
33	F4P–U828H–00	TRIM, 1	1					
34	F1W–U828M–00	BASE, CLAMP	2					
35	90267–48802	RIVET, BLIND	2					
36	90464–32801	CLAMP	2					

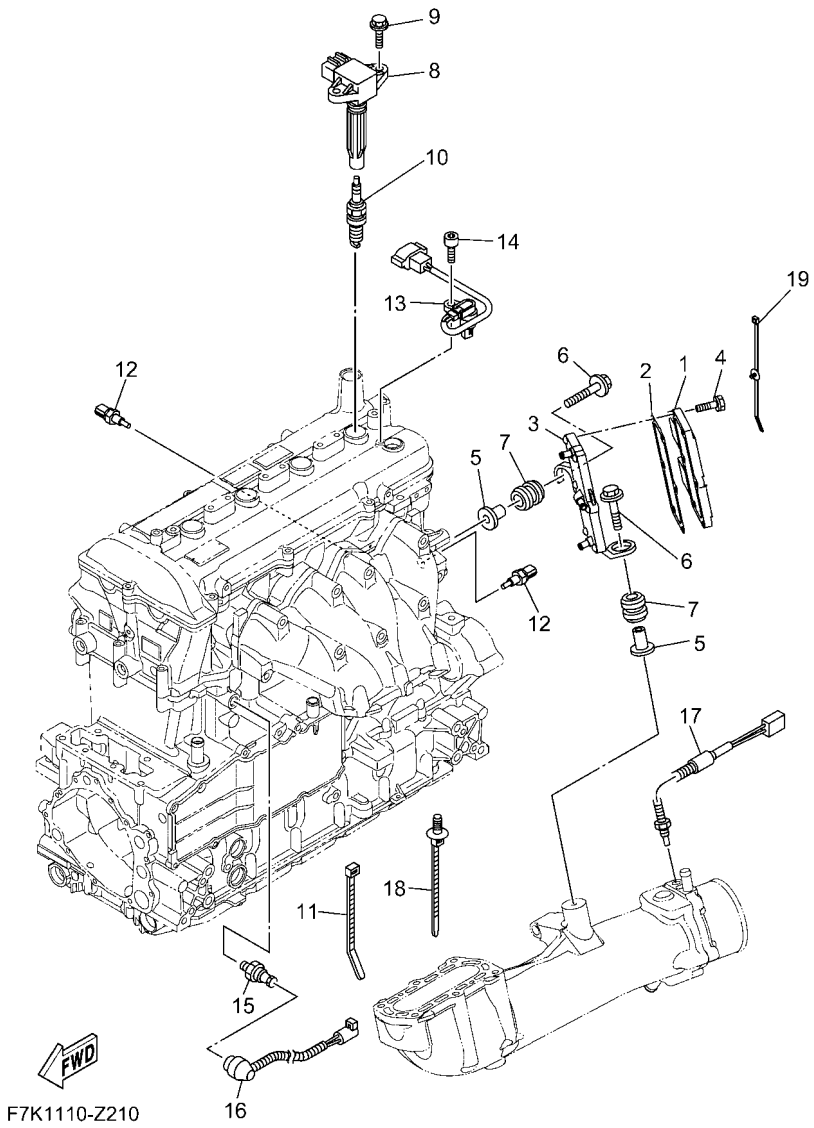

FIG. 21 ELECTRICAL 2

REF. NO.	PART NO.	DESCRIPTION	F7M7					REMARKS
1	6EK–81960–10	RECTIFIER & REGULATOR ASSY	1					
2	6ET–81975–01	PLATE, RECTIFIER FITTING	1					
3	6LE–81972–00	COVER, RECTIFIER	1					
4	90119–06MA4	BOLT, WITH WASHER	6					
5	90387–08M37	COLLAR	2					
6	90119–08187	BOLT, WITH WASHER	2					
7	90480–22M15	GROMMET	2					
8	6S5–82310–10	IGNITION COIL ASSY	4					
9	90105–06903	BOLT, FLANGE	8					
10	94702–00427	PLUG, SPARK (NGK LFR6A)	4					
11	1UA–82591–00	BAND	7					
12	4P9–83591–00	THERMO UNIT	2					
13	60E–85896–02	SENSOR, CAM POSITION	1					
14	91380–06016	BOLT	1					
15	68V–82504–00	OIL PRESSURE SWITCH ASSY	1					
16	6S5–81315–01	LEAD WIRE ASSY	1					
17	6AA–85790–00	THERMOSENSOR ASSY	1					
18	90464–31001	CLAMP	1					
19	90464–31002	CLAMP	3					

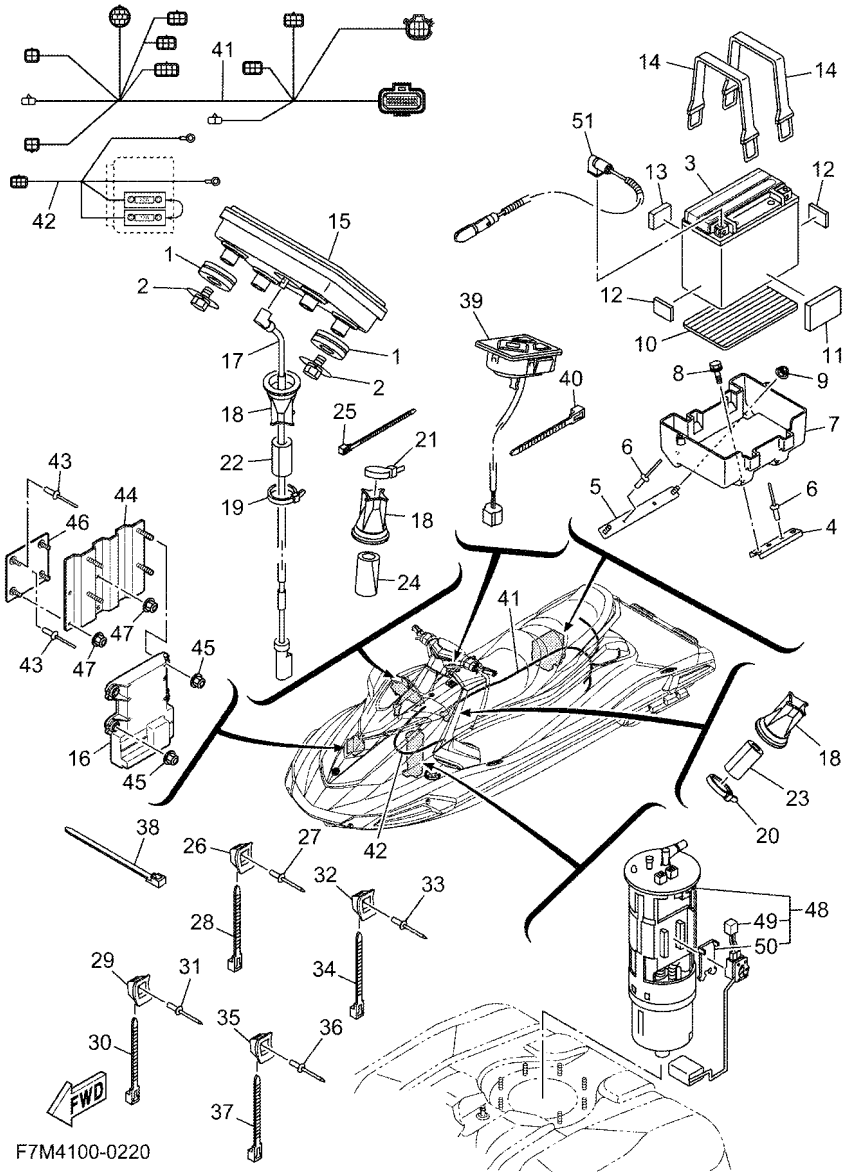

FIG. 22 ELECTRICAL 3

REF. NO.	PART NO.	DESCRIPTION	F7M7					REMARKS
1	90480–19800	GROMMET	4					
2	90119–05803	BOLT, WITH WASHER	4					
3	5FU–H2100–21	BATTERY ASSY (YUASA YTX20L-BS)	1					
4	F2S–U8592–00	PLATE, BASE 2	1					
5	F2S–U8593–00	PLATE, BASE 3	1					
6	90267–489U1	RIVET,BLIND	4					
7	F2S–U8211–00	CASE, BATTERY	1					
8	90119–06832	BOLT, WITH WASHER	2					
9	F2N–U142L–00	NUT, LOCK	2					
10	F1S–U8221–00	PAD, BATTERY	1					
11	F1W–U759C–01	MAT 2	1					
12	EU0–U8221–31	PAD, BATTERY	2					
13	F2C–U1743–00	PACKING	1					
14	F4P–U821D–00	BAND, BATTERY 1	2					
15	F7M–U820J–00	DISPLAY METER ASSY.	1					
16	F7M–U820H–10	METER CONTROL UNIT ASSY.	1					
17	F7M–U823K–00	CABLE,METER	1					
18	F3J–U822E–01	GROMMET	3					
19	90464–32801	CLAMP	1					
20	90464–32801	CLAMP	1					
21	90464–32801	CLAMP	1					
22	GJ1–U7578–22	PACKING, HOSE 2	1					
23	GJ1–U7578–22	PACKING, HOSE 2	1					
24	GJ1–U7578–22	PACKING, HOSE 2	1					
25	90464–31827	CLAMP	1					122X4.80
26	F1W–U828M–00	BASE, CLAMP	7					
27	90267–48806	RIVET, BLIND	7					

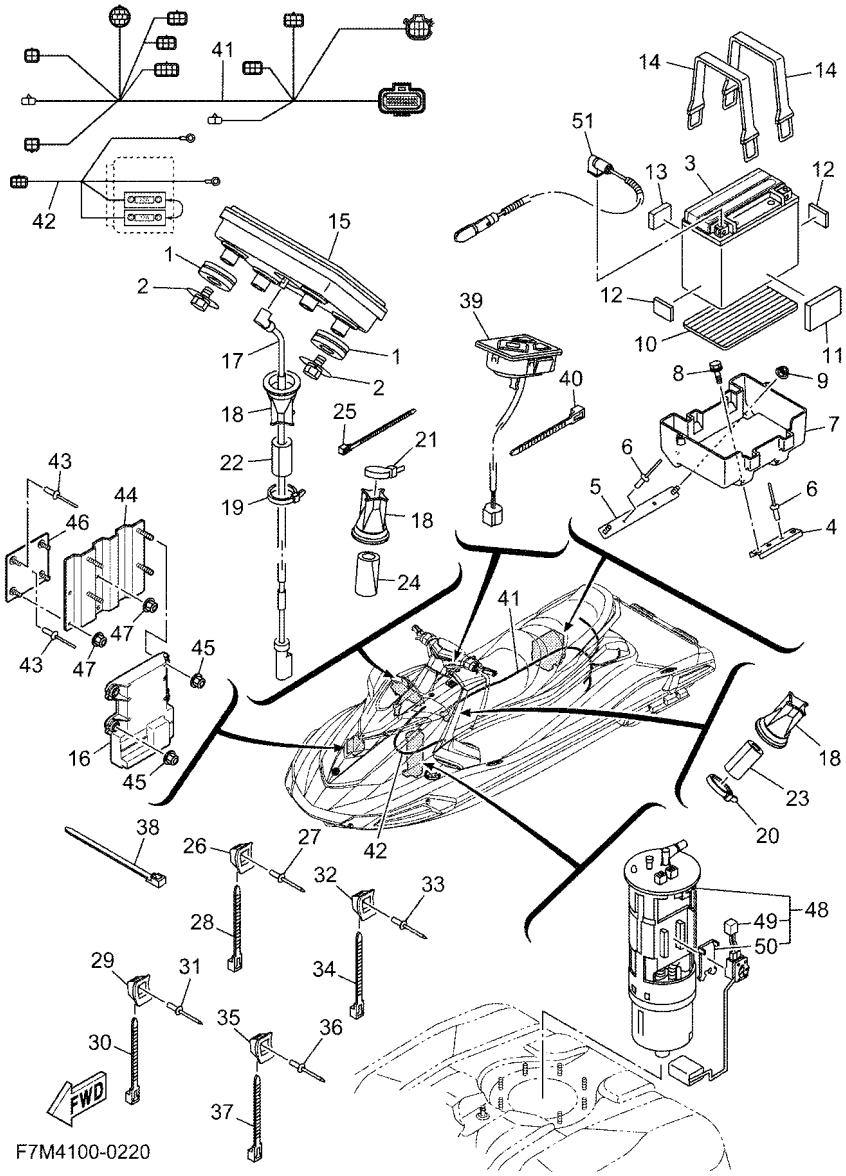

FIG. 22 ELECTRICAL 3

REF. NO.	PART NO.	DESCRIPTION	F7M7					REMARKS
28	90464–32801	CLAMP	7					
29	F1W–U828M–00	BASE, CLAMP	2					
30	90464–32801	CLAMP	2					
31	90267–48806	RIVET, BLIND	2					
32	F1W–U828M–00	BASE, CLAMP	3					
33	90267–48806	RIVET, BLIND	3					
34	F2C–U4256–00	CLAMP	1					
35	F1W–U828M–00	BASE, CLAMP	1					
36	90267–48806	RIVET, BLIND	1					
37	F2C–U4256–00	CLAMP	1					
38	90601–200U2	BAND	1					
39	F5G–U8090–01	SWITCH ASSY.	1					
40	90464–32801	CLAMP	1					
41	F7M–60891–00	WIRE HARNESS,1	1					
42	F7M–68275–00	WIRE, HARNESS	1					
43	90267–48806	RIVET, BLIND	2					
44	F7M–UFG21–00	BRACKET 1	1					
45	F2N–U142L–00	NUT, LOCK	4					
46	F7M–UFG22–00	BRACKET 2	1					
47	F2N–U142L–00	NUT, LOCK	4					
48	6S5–13907–05	FUEL PUMP COMP.	1					
49	6S5–682E0–10	.FUEL SENDER ASSY	1					
50	60E–82556–10	.DAMPER, STOPPER	1					
51	6JP–82116–00	WIRE, MINUS LEAD	1					

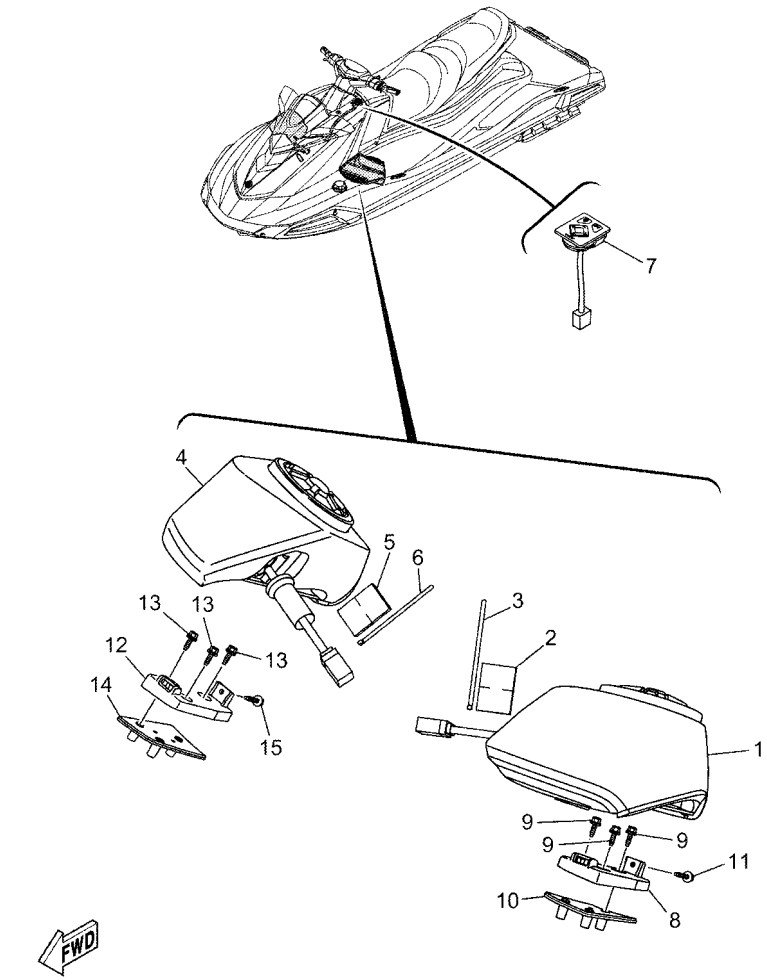

F7M4100-0230

FIG. 23 ELECTRICAL 4

REF. NO.	PART NO.	DESCRIPTION	F7M7					REMARKS
1	F7M–U8102–00	SPEAKER ASSY 1	1					
2	GJ1–U7578–12	PACKING, HOSE 2	1					
3	90464–32801	CLAMP	1					
4	F7M–U8103–00	SPEAKER ASSY 2	1					
5	GJ1–U7578–12	PACKING, HOSE 2	1					
6	90464–32801	CLAMP	1					
7	F7M–U81AJ–00	CONTROLLER, AUDIO	1					
8	F7M–UE6GA–00	BRACKET, SPEAKER 1	1					
9	90119–06878	BOLT, WITH WASHER	3					
10	F7M–U0392–00	BRACKET	1					
11	90119–06880	BOLT, WITH WASHER	1					
12	F7M–UE6GA–10	BRACKET, SPEAKER 1	1					
13	90119–06878	BOLT, WITH WASHER	3					
14	F7M–U0392–10	BRACKET	1					
15	90119–06880	BOLT, WITH WASHER	1					

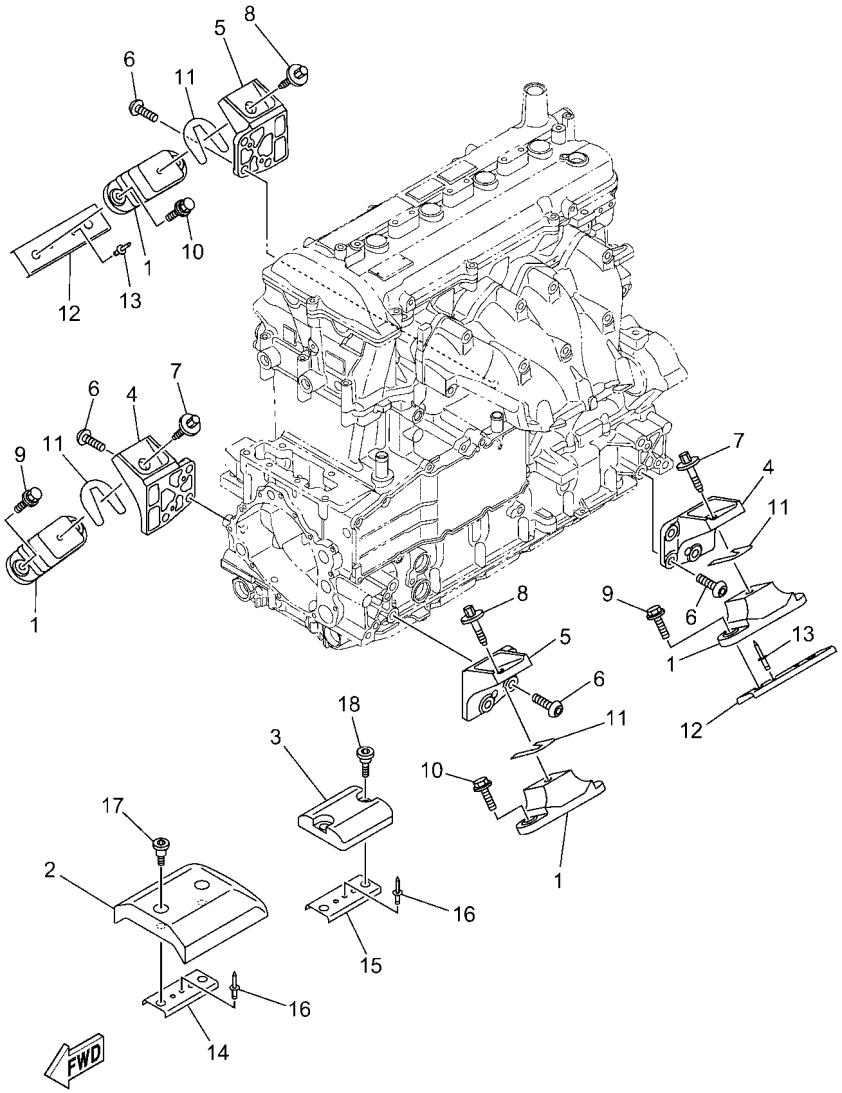

F7M1110-Z240

FIG. 24 ENGINE MOUNT

REF. NO.	PART NO.	DESCRIPTION	F7M7					REMARKS
1	67X–44517–10	MOUNT RUBBER	4					
2	6CN–G4532–00	STOPPER, UPPER MOUNT	1					
3	6CN–G4574–00	STOPPER, LOWER MOUNT RUBBER	1					
4	6BH–41661–00–94	BRACKET 1	2					
5	6BH–41662–00–94	BRACKET 2	2					
6	90149–10068	SCREW	12					
7	90119–08859	BOLT, WITH WASHER	2					
8	90119–08859	BOLT, WITH WASHER	2					
9	90119–08823	BOLT, WITH WASHER	4					
10	90119–08823	BOLT, WITH WASHER	4					
11	EU0–U7354–00–01	SHIM (T=0.1)	4					UN
	EU0–U7354–00–03	SHIM (T=0.3)	4					UN
	EU0–U7354–00–05	SHIM (T=0.5)	4					UN
	EU0–U7354–00–10	SHIM (T=1.0)	4					UN
	EU0–U7354–00–20	SHIM (T=2.0)	4					UN
12	F2S–U732B–00	PLATE	2					
13	90267–489U2	RIVET, BLIND	4					
14	F2M–U732B–00	PLATE	1					
15	F2M–U732B–00	PLATE	1					
16	90267–489U2	RIVET, BLIND	4					
17	90109–06874	BOLT	2					
18	90109–06875	BOLT	2					

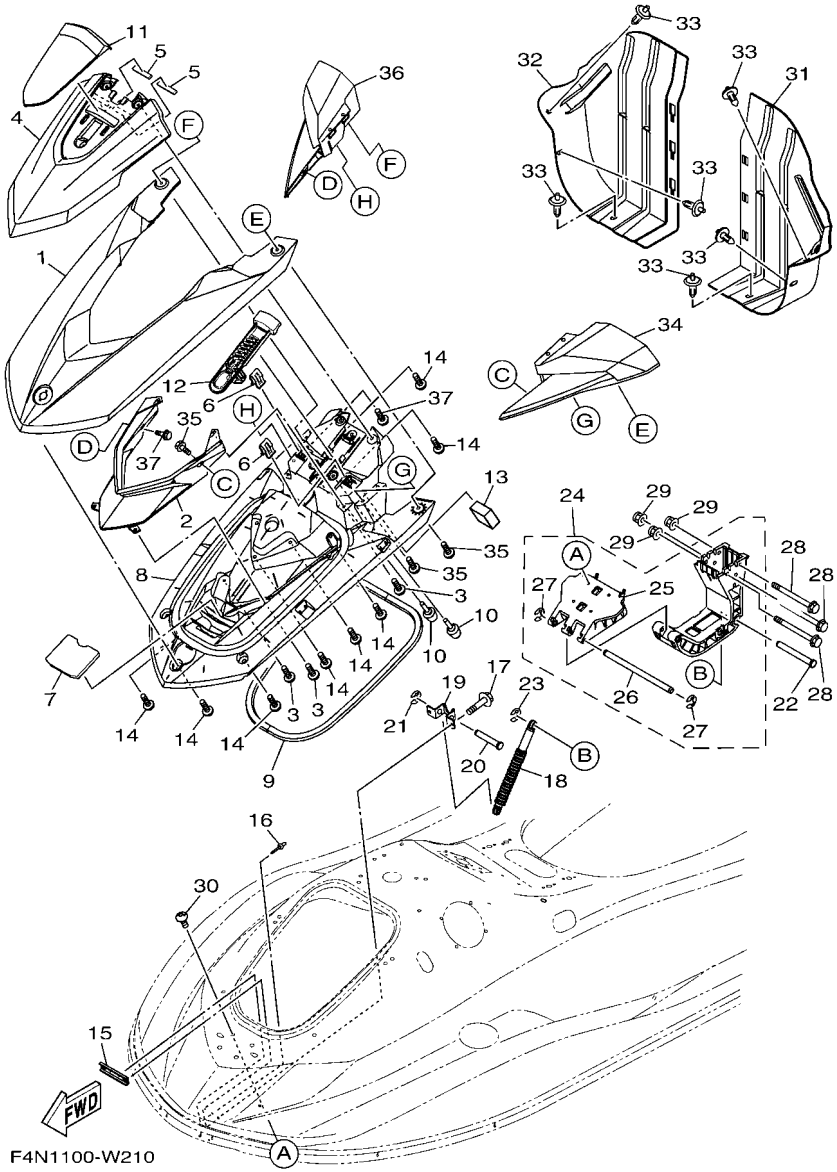

FIG. 25 ENGINE HATCH 1

REF. NO.	PART NO.	DESCRIPTION	F7M7					REMARKS
1	F4N–U517B–00–PD	LID, ENGINE ROOM (DPBM11)	1					
2	F4N–U517V–00	ORNAMENT, CENTER	1					
3	F2S–U13C1–00	SCREW	4					
4	F4N–U515N–02–PG	VISOR (DPBM11)	1					
5	F1K–U266B–00	PACKING 3	2					
6	F3Y–U153K–00	CLIP	2					
7	F4P–U7462–01	STOPPER, PACKING	1					
8	F4N–U519G–01	INNER, ENGINE HATCH	1					
9	F4P–U2663–01	PACKING 1	1					
10	F1W–U3768–01	CUSHION, RUBBER	4					
11	F4N–U515P–00	VISOR 2	1					
12	F4N–U517C–00	LOCK, LID	1					
13	F2C–U1743–00	PACKING	1					
14	F2S–U13C1–00	SCREW	12					
15	F2S–U8592–00	PLATE, BASE 2	1					
16	90267–489U1	RIVET,BLIND	2					
17	90119–06832	BOLT, WITH WASHER	2					
18	F4P–U515D–01	DAMPER 1	1					
19	F4P–UFRV1–00	BRACKET, DAMPER 1	1					
20	F4P–U7243–00	CLEVIS	1					
21	F4P–U515C–00	E-RING	1					
22	F4P–UF8DM–00	CLEVIS 1	1					
23	F4P–U515C–00	E-RING	1					
24	F4P–U515A–00	HINGE ASSY.	1					
25	F4P–U518E–00	.PLATE, HINGE LID	1					
26	F4P–U7256–00	.ROD	1					
27	F4P–U515C–00	.E-RING	2					

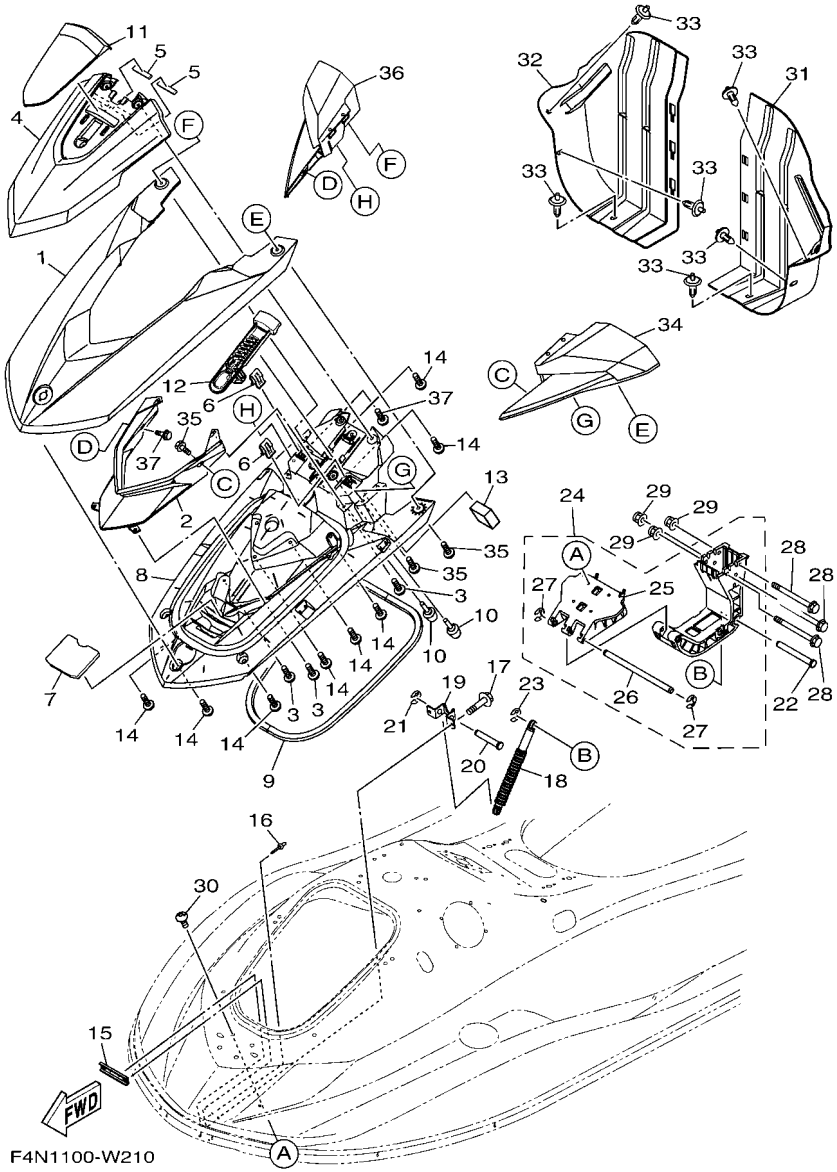

FIG. 25 ENGINE HATCH 1

REF. NO.	PART NO.	DESCRIPTION	F7M7					REMARKS
28	F4P–U4445–00	BOLT, STUD 1	3					
29	F3Y–U142L–00	NUT, LOCK	3					
30	90111–06873	BOLT, HEXAGON SOCKET BUTTON	4					
31	F4P–U475B–00	LOCKER,BOW	1					
32	F4P–U475F–00	PLATE, LOKER BOW	1					
33	F4P–U1454–00	RIVET	6					
34	F4N–U590D–70	MIRROR ASSY 1	1					
35	90119–06880	BOLT, WITH WASHER	4					
36	F4N–U590E–70	MIRROR ASSY 2	1					
37	90119–06880	BOLT, WITH WASHER	4					

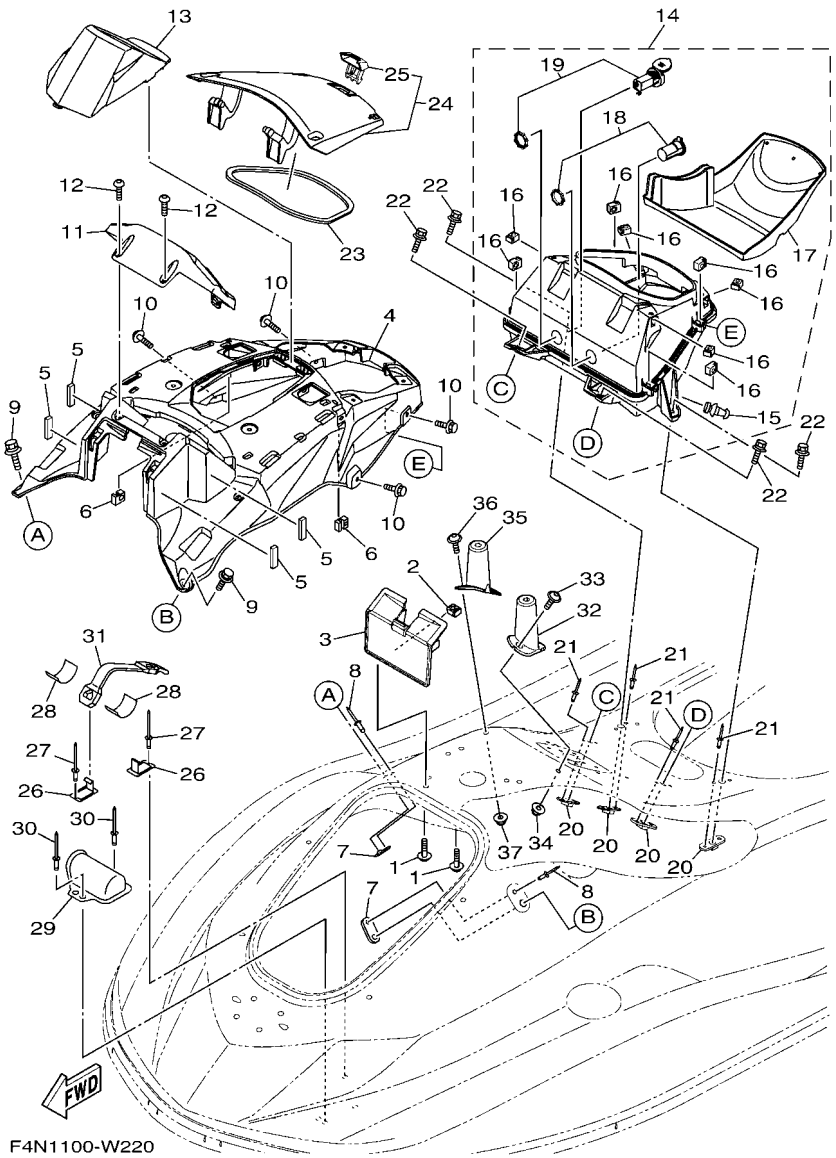

FIG. 26 ENGINE HATCH 2

REF. NO.	PART NO.	DESCRIPTION	F7M7					REMARKS
1	90119–06880	BOLT, WITH WASHER	2					
2	F3X–U517E–00	NUT	2					
3	F4P–U517F–00	HOOK,LID LOCK	1					
4	F4N–U5554–00	COVER, CENTER	1					
5	F1K–U266B–00	PACKING 3	4					
6	F3X–U517E–00	NUT	2					
7	F2X–U5175–00	PLATE, FIX	2					
8	90267–489U1	RIVET,BLIND	2					
9	90119–06882	BOLT, WITH WASHER	2					
10	F4P–U1355–00	BOLT	4					
11	F4N–U8262–00	COVER METER	1					
12	F2S–U13C1–00	SCREW	2					
13	F4N–U513M–00	COVER, FRONT	1					
14	F7M–U1708–10	GLOVE BOX HATCH ASSY	1					
15	F3X–U2723–00	.SEAL	1					
16	F3X–U517E–00	.NUT	8					
17	F4N–U591L–00	.INNER, CASE	1					
18	F7M–H254B–01	.TERMINAL COMP.	1					
19	F7M–H21E1–10	.PLUG, USB	1					
20	F2C–U826C–00	BRACKET	4					
21	F4P–U516R–01	RIVET 1	8					
22	90119–08822	BOLT, WITH WASHER	4					
23	F4N–U519D–02	PACKING CASE	1					
24	F4N–U4705–01	GLOVE BOX COVER ASSY	1					
25	F4N–U2875–00	.LOCK	1					
26	F1K–U5772–04	HOOK A	2					
27	90267–489U1	RIVET,BLIND	2					

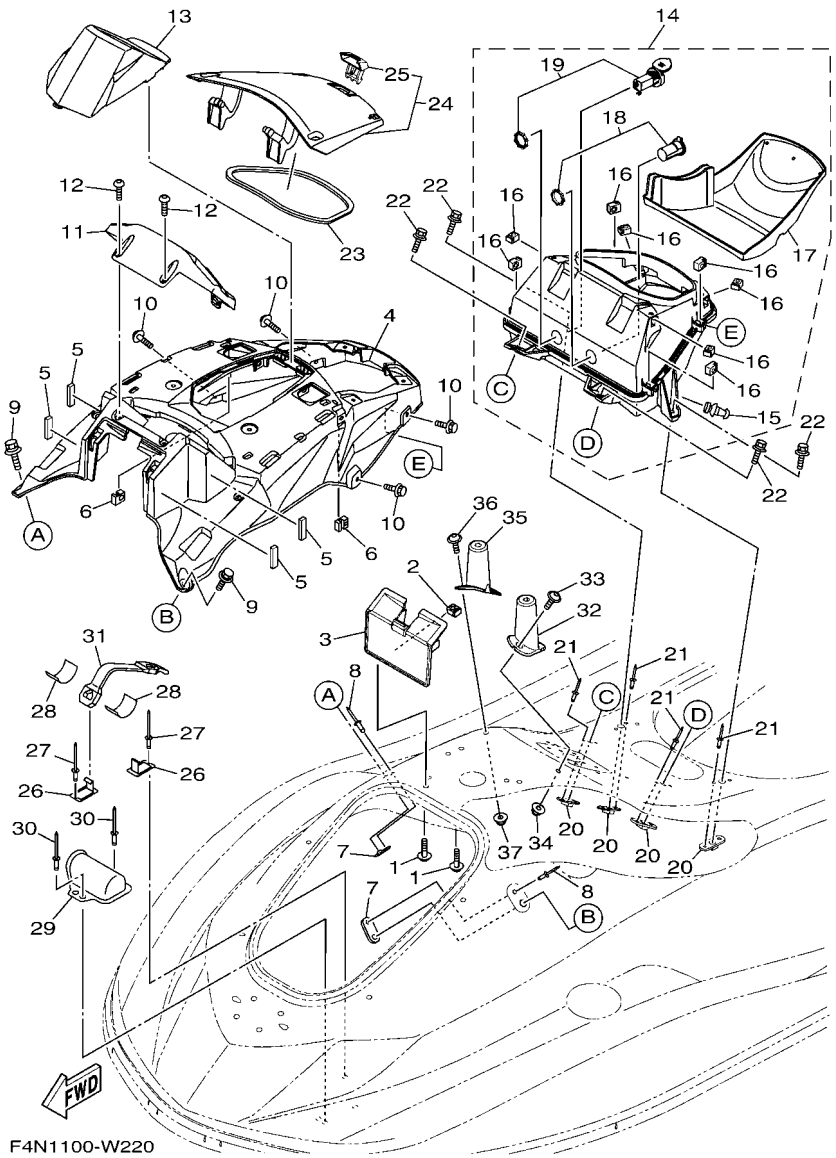

FIG. 26 ENGINE HATCH 2

REF. NO.	PART NO.	DESCRIPTION	F7M7					REMARKS
28	F1K–U759C–00	MAT 2	2					
29	F2X–U5983–00	BOX, FIRE EXTINGUISHER	1					
30	90267–48802	RIVET, BLIND	2					
31	F2P–U828K–00	BAND 1	1					
32	F4N–U974A–00	RFM.,DASH BOARD 1	1					
33	F3X–U7823–12	SCREW	2					
34	F2N–U142L–00	NUT, LOCK	2					
35	F4N–U974B–00	RFM.,DASH BOARD 2	1					
36	F3X–U7823–12	SCREW	2					
37	F2N–U142L–00	NUT, LOCK	2					

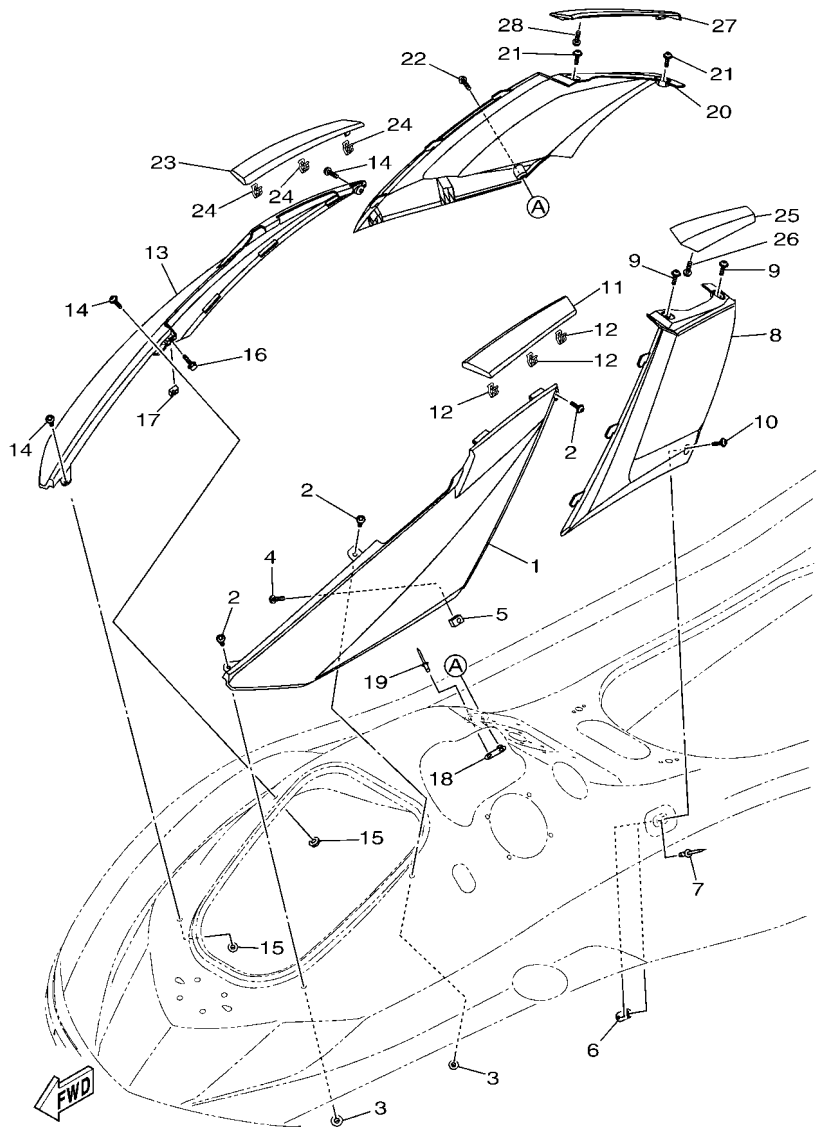

F4N1100-W230

FIG. 27 ENGINE HATCH 3

REF. NO.	PART NO.	DESCRIPTION	F7M7					REMARKS
1	F4N–U377B–00–P6	COVER,SIDE 1 (VPBM6)	1					
2	F3X–U7823–12	SCREW	3					
3	F2N–U142L–00	NUT, LOCK	2					
4	90119–06880	BOLT, WITH WASHER	1					
5	F3X–U517E–00	NUT	1					
6	F2X–U5175–00	PLATE, FIX	1					
7	90267–489U1	RIVET,BLIND	1					
8	F4N–U353B–00–PC	PAD, KNEE (DPBM11)	1					
9	F3X–U7823–12	SCREW	2					
10	F3X–U7823–02	SCREW	1					
11	F4N–U517W–01–PA	ORNAMENT LH (VPBM6)	1					
12	F3Y–U153K–00	CLIP	3					
13	F4N–U377C–00–P6	COVER,SIDE 2 (VPBM6)	1					
14	F3X–U7823–12	SCREW	3					
15	F2N–U142L–00	NUT, LOCK	2					
16	90119–06880	BOLT, WITH WASHER	1					
17	F3X–U517E–00	NUT	1					
18	F2X–U5175–00	PLATE, FIX	1					
19	90267–489U1	RIVET,BLIND	1					
20	F4N–U353C–00–PC	PAD, KNEE 1 (DPBM11)	1					
21	F3X–U7823–12	SCREW	2					
22	F3X–U7823–02	SCREW	1					
23	F4N–U517X–01–PA	ORNAMENT RH (VPBM6)	1					
24	F3Y–U153K–00	CLIP	3					
25	F4N–U89AA–00–PC	ORNAMENT, MIDDLE LH (DPBM11)	1					
26	F2S–U13C1–00	SCREW	1					
27	F4N–U89AB–00–PC	ORNAMENT, MIDDLE RH (DPBM11)	1					

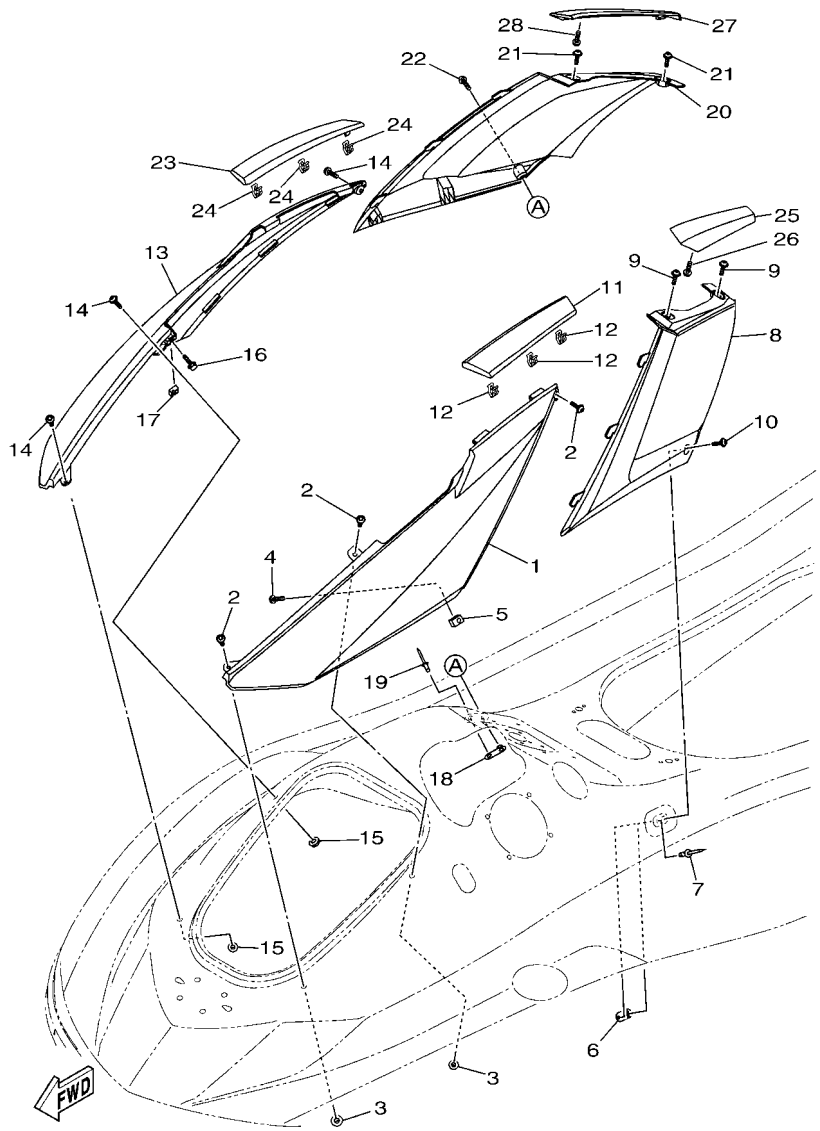

F4N1100-W230

FIG. 27 ENGINE HATCH 3

REF. NO.	PART NO.	DESCRIPTION	F7M7					REMARKS
28	F2S–U13C1–00	SCREW	1					

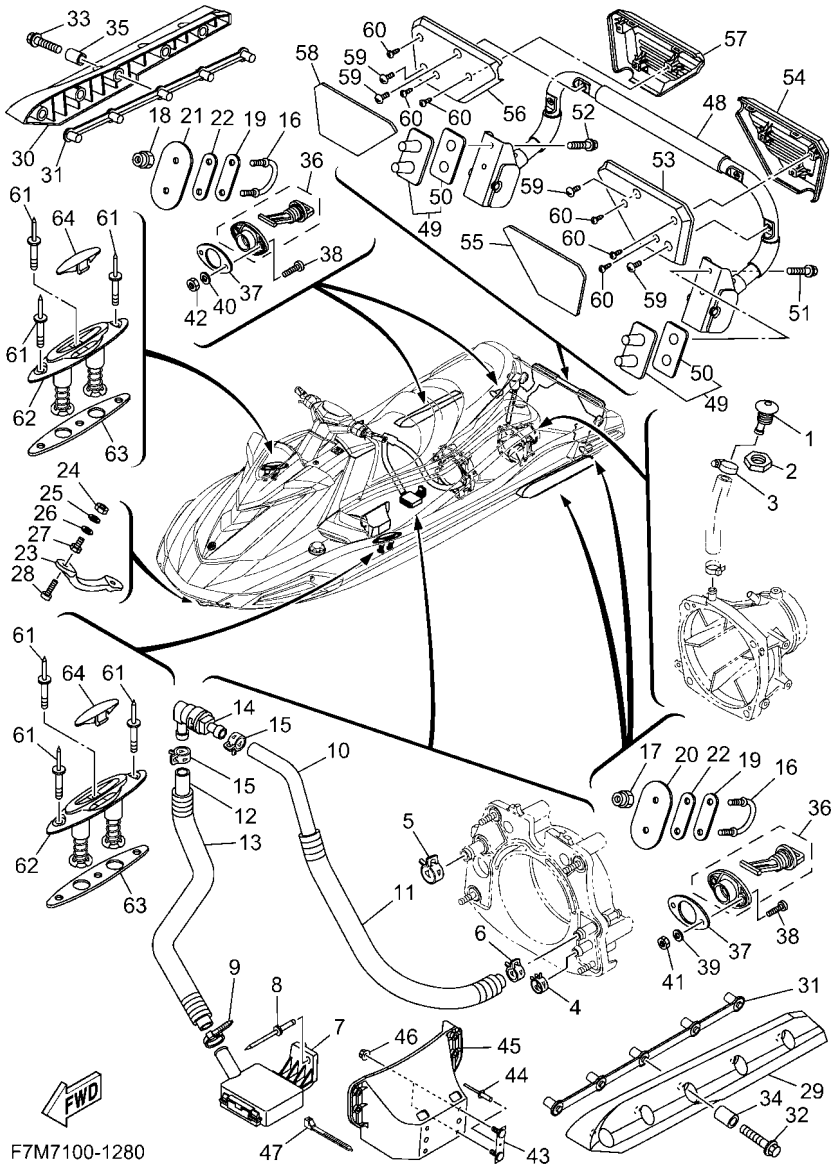

FIG. 28 HULL & DECK

REF. NO.	PART NO.	DESCRIPTION	F7M7					REMARKS
1	F1W–U269B–00	SPOUT	1					
2	EU0–61652–00	NUT	1					
3	90601–118UF	BAND, HOSE 18	1					
4	90467–200A3	CLIP	1					
5	90467–240A3	CLIP	1					
6	90467–180A5	CLIP	1					
7	F1B–U761D–02	STRAINER, BILGE	1					
8	90267–489U8	RIVET, BLIND	1					
9	90465–11829	CLAMP	1					
10	90445–20804	HOSE (L860)	1					
11	6EX–U773E–00	TUBE,2	1					
12	90445–20800	HOSE (L500)	1					
13	6EX–U773D–00	TUBE	1					
14	68N–5112T–00	JOINT, HOSE	1					
15	90467–180A5	CLIP	2					
16	F2N–U1628–10	STERN EYE	2					
17	9572R–08300	NUT, FLANGE	2					
18	9572R–08300	NUT, FLANGE	2					
19	GP7–U4953–10	PLATE A	2					
20	F7M–U4953–20	PLATE A	1					
21	F7M–U4953–20	PLATE A	1					
22	F1B–U1653–03	PACKING	2					
23	F1K–61624–00	BOW EYE 1	1					
24	99780–12600	NUT.HEX.(COARS)	2					
25	92990–12200	WASHER, PLAIN	2					
26	F0X–61637–00	WASHER	2					
27	F0X–61652–01	NUT	2					

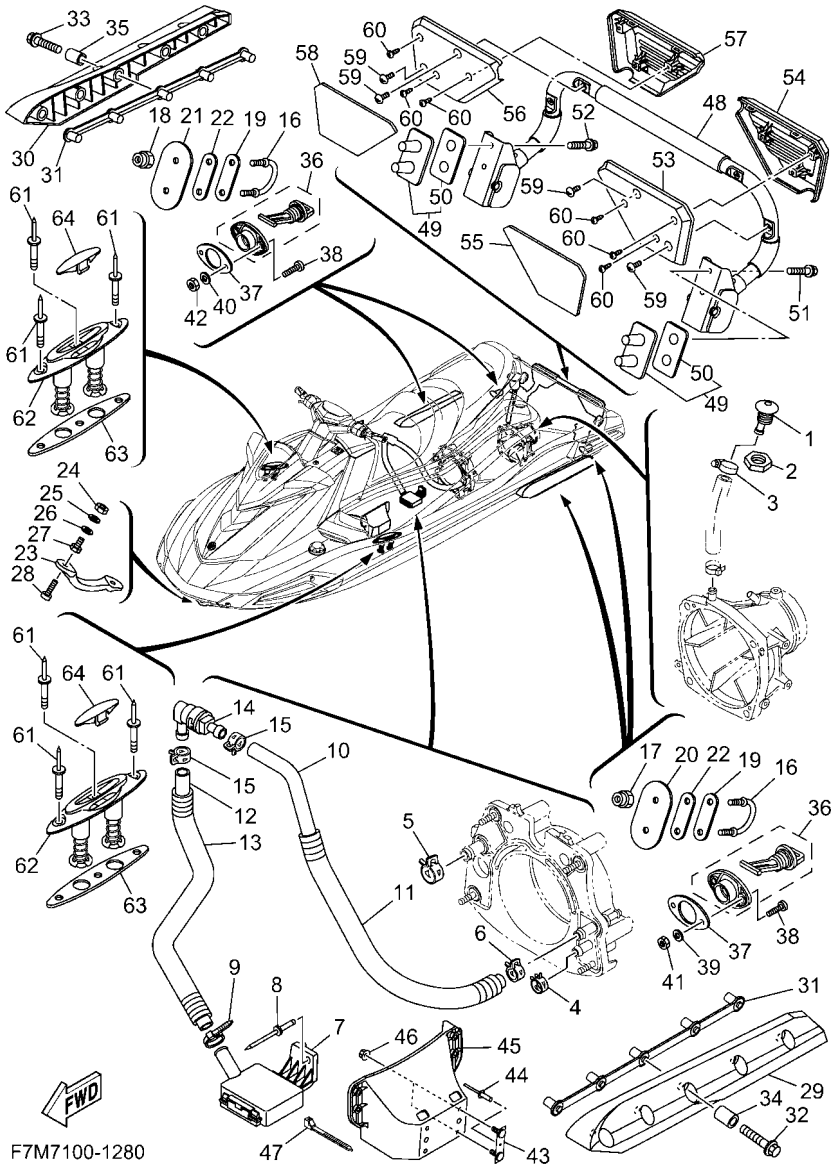

FIG. 28 HULL & DECK

REF. NO.	PART NO.	DESCRIPTION	F7M7					REMARKS
28	90110–06040	BOLT, HEXAGON SOCKET HEAD	2					
29	F1S–U883N–01	STABILIZER LH	1					BLACK
30	F1S–U883P–01	STABILIZER RH	1					BLACK
31	F1X–U883T–02	BRACKET,STABILIZER	2					
32	90105–08860	BOLT, FLANGE	5					
33	90105–08860	BOLT, FLANGE	5					
34	F2N–U8169–10	SPACER	5					
35	F2N–U8169–10	SPACER	5					
36	F1S–U2280–02	DRAIN PLUG ASSY.	2					
37	F1S–U2285–01	PACKING, DRAIN	2					
38	9788R–05025	SCREW, PAN HEAD	4					
39	9299R–05200	WASHER	2					
40	9299R–05200	WASHER	2					
41	9572R–05300	NUT, FLANGE	2					
42	9572R–05300	NUT, FLANGE	2					
43	F1K–U826C–03	BRACKET	2					
44	90267–489U1	RIVET,BLIND	2					
45	F4P–U8572–00	BRACKET 2	1					
46	F3Y–U142L–00	NUT, LOCK	4					
47	90464–32801	CLAMP	1					
48	F4N–U278A–00	LADDER, STEP ASSY	1					
49	F2S–U278F–01	BRACKET, LADDER LH	2					
50	F2S–U278H–01	.PACKING, BRKT. 1	1					
51	90119–08861	BOLT, WITH WASHER	2					
52	90119–08861	BOLT, WITH WASHER	2					
53	F4N–U882F–00	STEP	1					
54	F4N–U884R–00	PLATE, STEP 1	1					

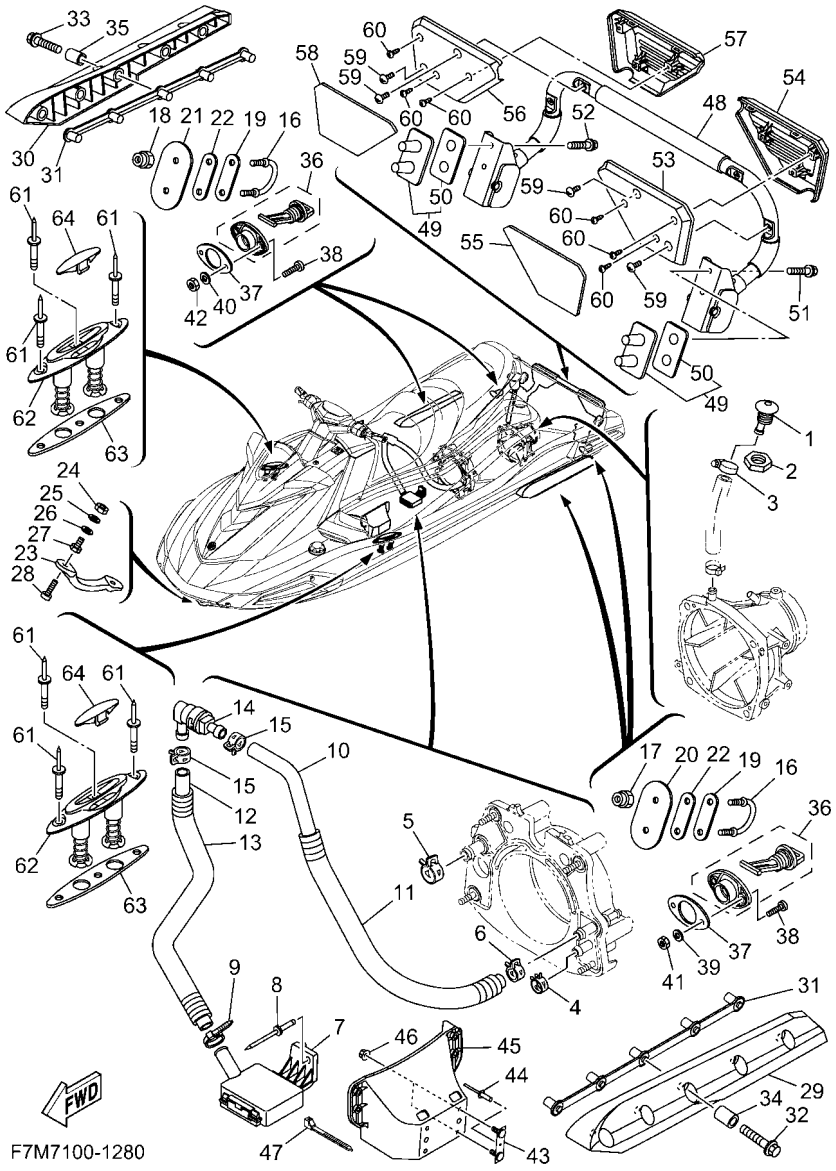

FIG. 28 HULL & DECK

REF. NO.	PART NO.	DESCRIPTION	F7M7					REMARKS
55	F4N–U351R–10	MAT, STEP 7	1					
56	F4N–U882F–10	STEP	1					
57	F4N–U884R–10	PLATE, STEP 1	1					
58	F4N–U351S–10	MAT, STEP 8	1					
59	90119–069UH	BOLT, WITH WASHER	4					
60	90109–06832	BOLT	6					
61	90267–489U2	RIVET, BLIND	12					
62	F4G–U163A–02	CLEAT ASSY.	4					
63	F4G–U2284–10	PACKING	4					
64	F1X–U826D–01	COVER	4					

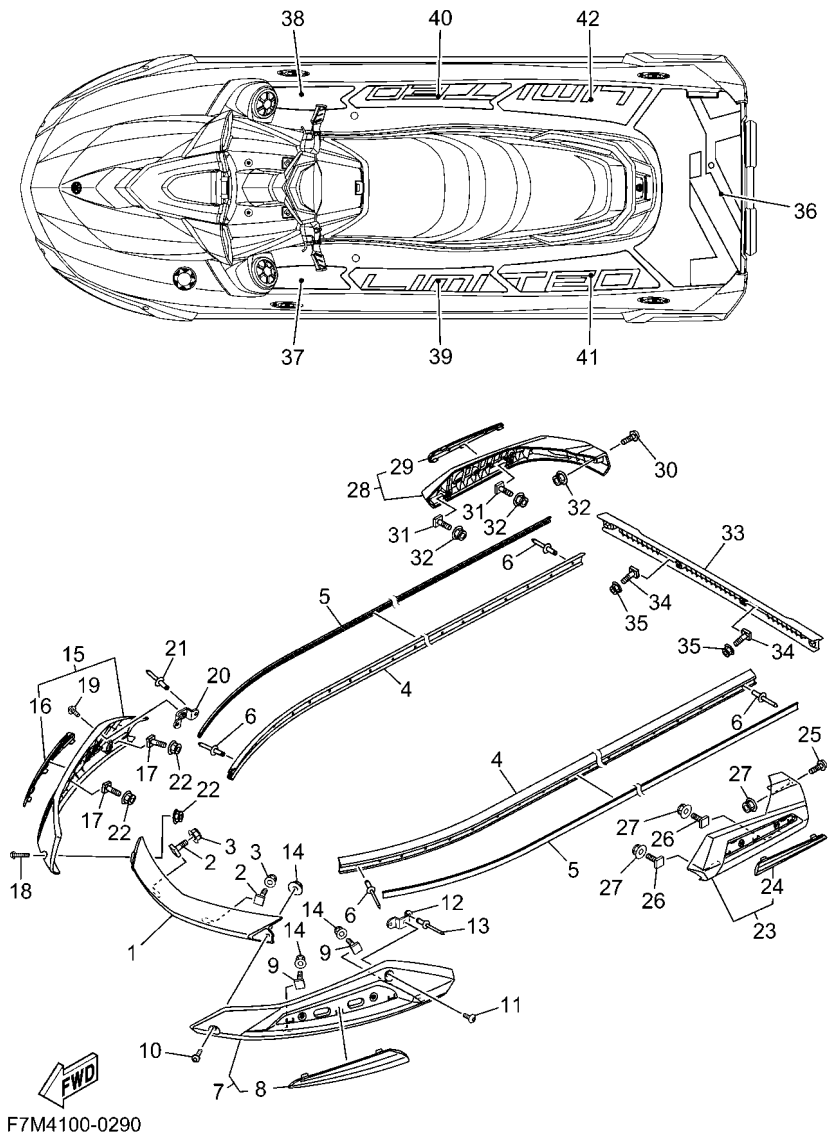

F7M4100-0290

FIG. 29 GUNWALE & MAT

REF. NO.	PART NO.	DESCRIPTION	F7M7					REMARKS
1	F4N–U2511–00	GUNWALE, BOW	1					BLACK
2	F7K–U491K–00	BOLT, SPECIAL	2					
3	F2N–U142L–00	NUT, LOCK	2					
4	F4N–U2512–00	GUNWALE, SIDE	2					BLACK
5	F4N–U2519–10	INNER,GUNWALE	2					BLACK
6	F7K–U1454–00	RIVET	16					
7	F4N–U2510–R0	GUNWALE ASSY.	1					BLACK
8	F4N–U2514–J0	.GUNWALE INSIDE	1					WHITE
9	F7K–U491K–00	BOLT, SPECIAL	2					
10	F3X–U7823–12	SCREW	1					
11	90111–06874	BOLT, HEXAGON SOCKET BUTTON	1					
12	F3X–U4949–00	BRACKET	1					
13	90267–489U6	RIVET, BLIND	2					
14	F2N–U142L–00	NUT, LOCK	3					
15	F4N–U2510–S0	GUNWALE ASSY.	1					BLACK
16	F4N–U2514–K0	.GUNWALE INSIDE	1					WHITE
17	F7K–U491K–00	BOLT, SPECIAL	2					
18	F3X–U7823–12	SCREW	1					
19	90111–06874	BOLT, HEXAGON SOCKET BUTTON	1					
20	F3X–U4949–00	BRACKET	1					
21	90267–489U6	RIVET, BLIND	2					
22	F2N–U142L–00	NUT, LOCK	3					
23	F4N–U2504–R0	STERN GUNWALE COMP.	1					BLACK
24	F4N–U255C–J0	.INNER GUNWALE, AFT	1					WHITE
25	F4P–U7823–00	SCREW	1					
26	F7K–U491K–00	BOLT, SPECIAL	2					
27	F2N–U142L–00	NUT, LOCK	3					

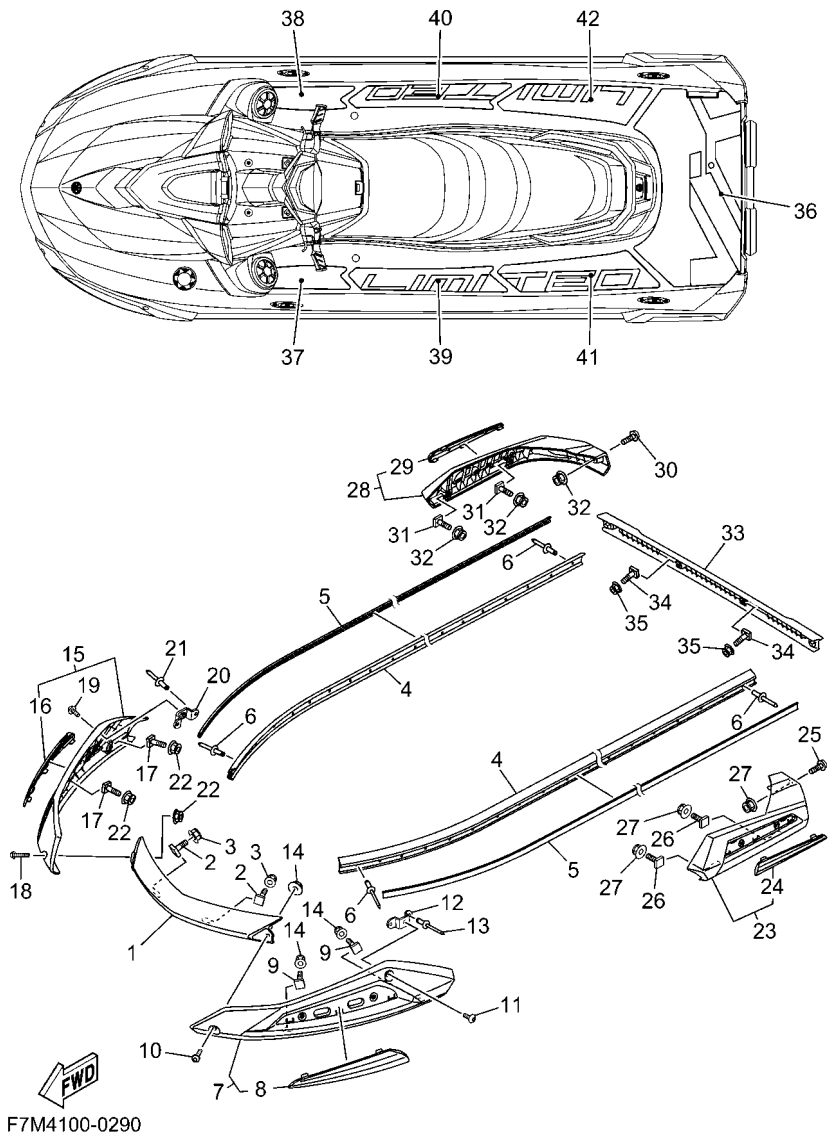

F7M4100-0290

FIG. 29 GUNWALE & MAT

REF. NO.	PART NO.	DESCRIPTION	F7M7					REMARKS
28	F4N–U2504–S0	STERN GUNWALE COMP.	1					BLACK
29	F4N–U255C–K0	.INNER GUNWALE, AFT	1					WHITE
30	F7K–U491K–00	BOLT, SPECIAL	2					
31	F4P–U7823–00	SCREW	1					
32	F2N–U142L–00	NUT, LOCK	3					
33	F4P–U252C–02	COVER, GUNWALE 1	1					BLACK
34	F7K–U491K–00	BOLT, SPECIAL	2					
35	F2N–U142L–00	NUT, LOCK	2					
36	F4S–U3581–11	MAT, UPPER	1					BLACK/BLUE
37	F4S–U351H–10	MAT, STEP 1	1					BLACK/BLUE
38	F4S–U351J–10	MAT, STEP 2	1					BLACK/BLUE
39	F4S–U351K–10	MAT, STEP 3	1					BLACK/BLUE
40	F4S–U351M–10	MAT, STEP 4	1					BLACK/BLUE
41	F4S–U351N–10	MAT, STEP 5	1					BLACK/BLUE
42	F4S–U351P–10	MAT, STEP 6	1					BLACK/BLUE

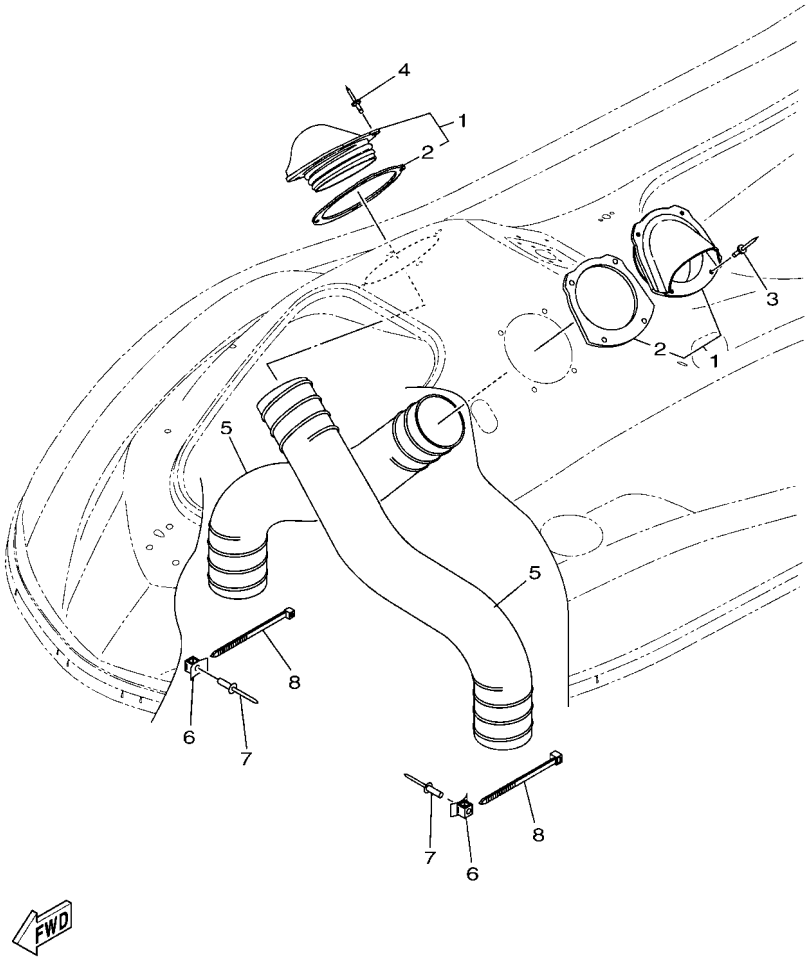

F4N1100-W260

FIG. 30 VENTILATION

REF. NO.	PART NO.	DESCRIPTION	F7M7					REMARKS
1	F2X–U2127–00	BASE, AIR INTAKE	2					
2	F2X–U2157–00	.PACKING	1					
3	90267–48806	RIVET, BLIND	4					
4	90267–48806	RIVET, BLIND	4					
5	F2N–U213G–02	HOSE, VENTILATOR 2	2					
6	F1W–U828M–00	BASE, CLAMP	2					
7	90267–48806	RIVET, BLIND	2					
8	90464–99804	CLAMP	2					

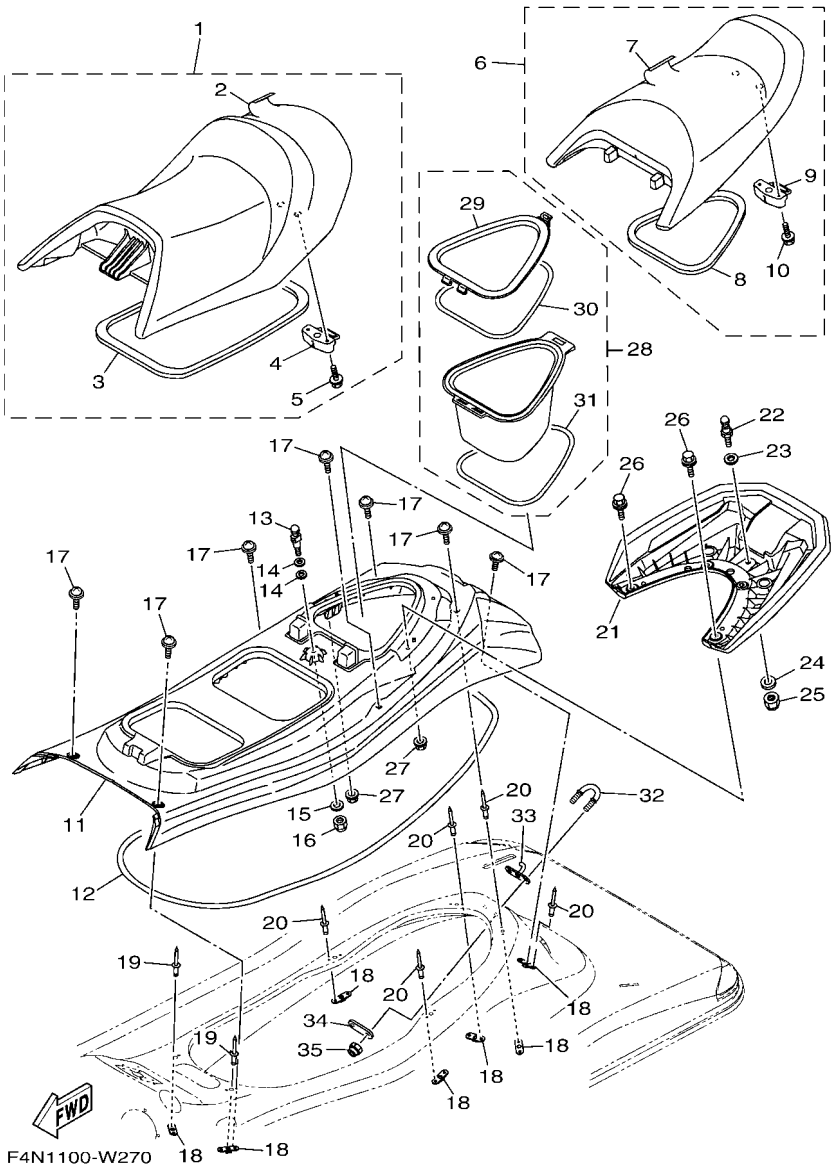

FIG. 31 SEAT & UNDER LOCKER

REF. NO.	PART NO.	DESCRIPTION	F7M7					REMARKS
1	F6G–U371A–60	DOUBLE SEAT ASSY	1					
2	F6G–U371B–60	.COVER, SEAT 1	1					
3	F4P–U2664–00	.PACKING	1					
4	F2C–U3850–00	.SEAT LOCK ASSY	1					
5	90119–069UP	.BOLT, WITH WASHER	2					
6	F6G–U372A–60	SINGLE SEAT ASSY	1					
7	F6G–U372B–60	.COVER, SEAT	1					
8	F4P–U266D–00	.PACKING 5	1					
9	F1B–U3850–02	.SEAT LOCK ASSY	1					
10	90119–069UP	.BOLT, WITH WASHER	2					
11	F4P–U3743–00	BASE, SEAT 2	1					
12	F4P–U266B–00	PACKING 3	1					
13	GH1–U3774–00	PIN	1					
14	90201–109U6	WASHER, PLATE	2					
15	9299R–10200	WASHER	1					
16	9572R–10300	NUT, NYLON	1					
17	F3Y–U491K–02	BOLT, SPECIAL	7					
18	F2C–U826C–00	BRACKET	7					
19	F4P–U516R–01	RIVET 1	4					
20	90267–489U1	RIVET,BLIND	10					
21	F4N–U271B–00	GRIP, HAND	1					
22	GH1–U3774–00	PIN	1					
23	90201–109U6	WASHER, PLATE	1					
24	9299R–10200	WASHER	1					
25	9572R–10300	NUT, NYLON	1					
26	90119–08829	BOLT, WITH WASHER	4					
27	F3Y–U142L–00	NUT, LOCK	4					

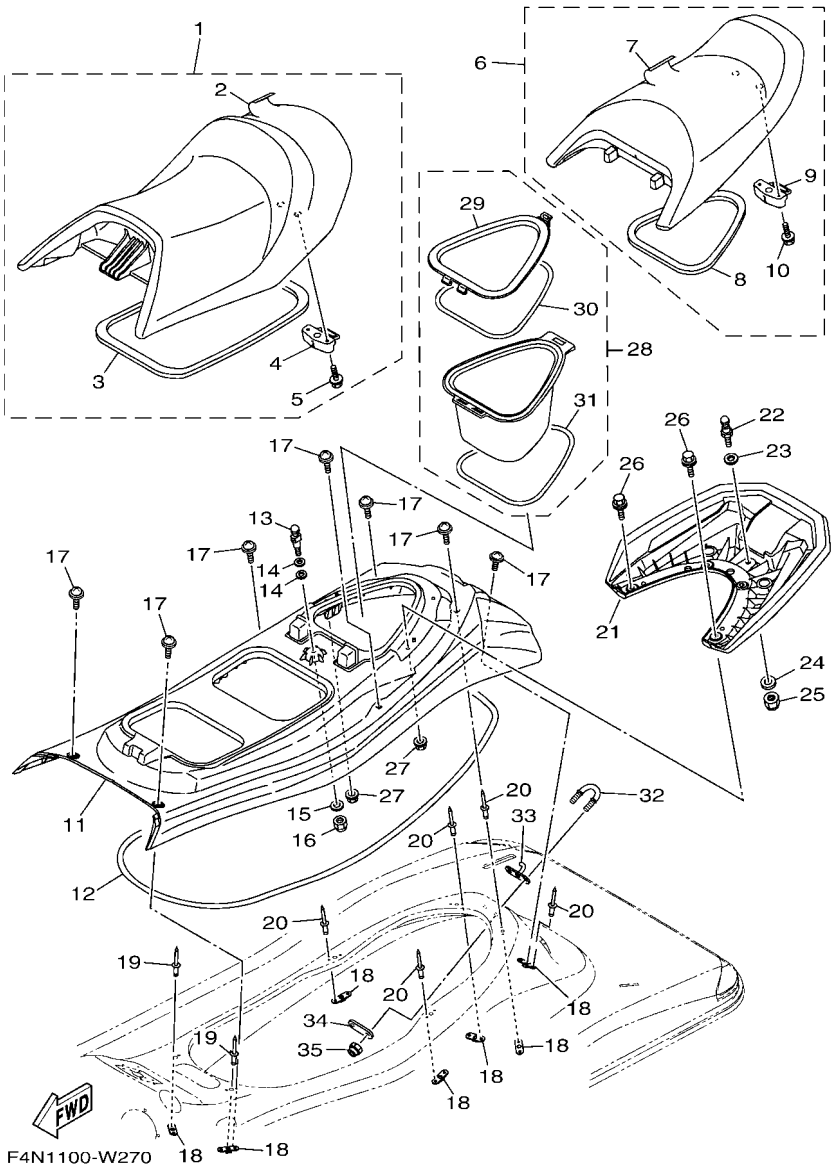

FIG. 31 SEAT & UNDER LOCKER

REF. NO.	PART NO.	DESCRIPTION	F7M7					REMARKS
28	F4P–U591A–00	CASE ASSY 1	1					
29	F4P–U591C–00	.CAP,CASE	1					
30	F4P–U591D–00	.PACKING,CASE	1					
31	F4P–U266E–00	.PACKING 6	1					
32	F2N–U1628–10	STERN EYE	1					
33	F4G–U372G–00	EYELET	1					
34	GP7–U4953–10	PLATE A	1					
35	9572R–08300	NUT, FLANGE	2					

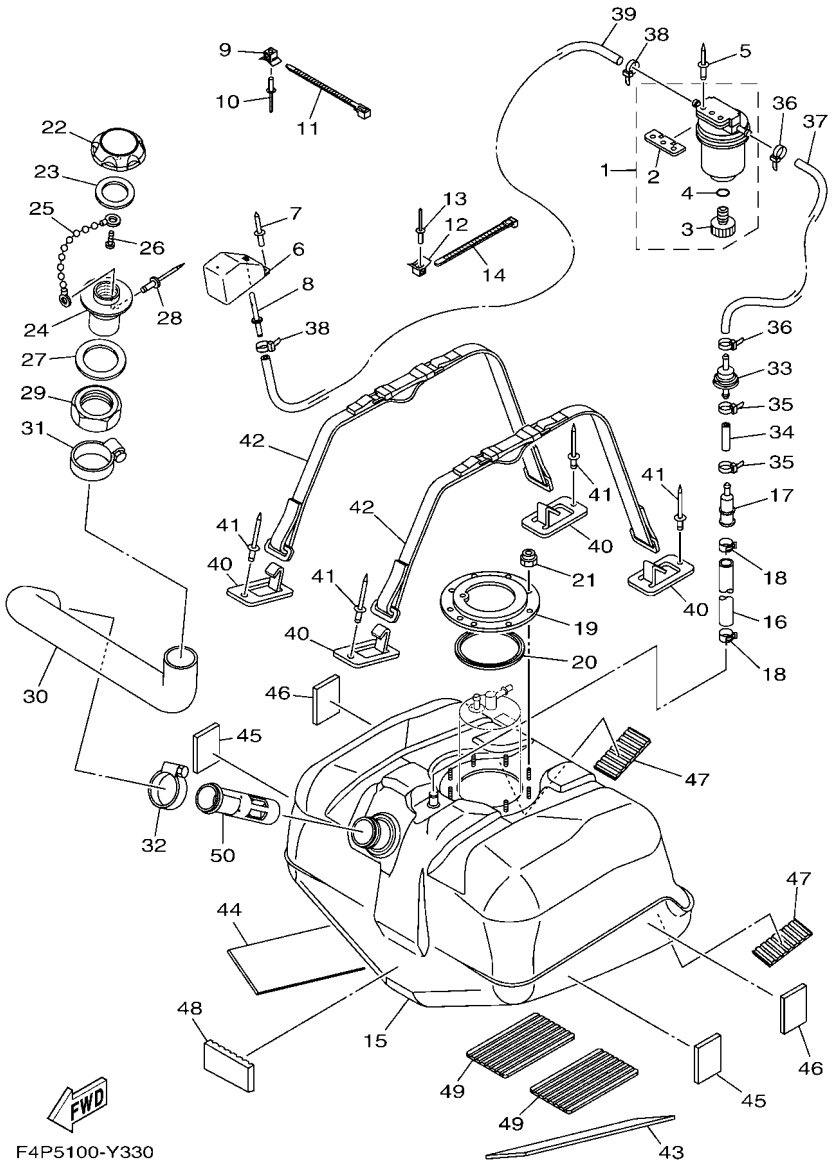

FIG. 32 FUEL TANK

REF. NO.	PART NO.	DESCRIPTION	F7M7					REMARKS
1	F2F–6214A–00	FILTER, VENT ASSY	1					
2	EW2–62142–00	.PLATE, FILTER	1					
3	70R–24543–00	.PLUG, DRAIN	1					
4	70R–24489–00	.O-RING	1					
5	90267–489U2	RIVET, BLIND	2					
6	GP7–62159–02	SOCKET, VENTILATION	1					
7	90267–489U6	RIVET, BLIND	2					
8	F1G–62149–00	PIPE, VENTILATION	1					
9	F1W–U828M–00	BASE, CLAMP	1					
10	90267–48806	RIVET, BLIND	1					
11	90464–32801	CLAMP	1					
12	F1W–U828M–00	BASE, CLAMP	1					
13	90267–48806	RIVET, BLIND	1					
14	90464–32801	CLAMP	1					
15	F4P–U7711–00	TANK, FUEL	1					
16	F4P–U785G–00	HOSE, AIR VENT	1					
17	F4P–U8167–10	CONNECTOR	1					
18	90467–190A2	CLIP	2					
19	F1B–U7773–00	RING	1					
20	F1B–67747–00	PACKING, SEAL	1					
21	9572R–06300	NUT, NYLON	9					
22	F2N–U7831–10	CAP, FUEL FILLER	1					BLACK
23	GP7–U7832–01	PACKING	1					
24	GP7–U7833–11	SOCKET	1					BLACK
25	GP7–U7835–00	CHAIN BALL	1					
26	90169–049U1	SCREW, TRUSS HEAD TAPPING	1					
27	GP7–U7834–00	PACKING FUEL FILLER	1					

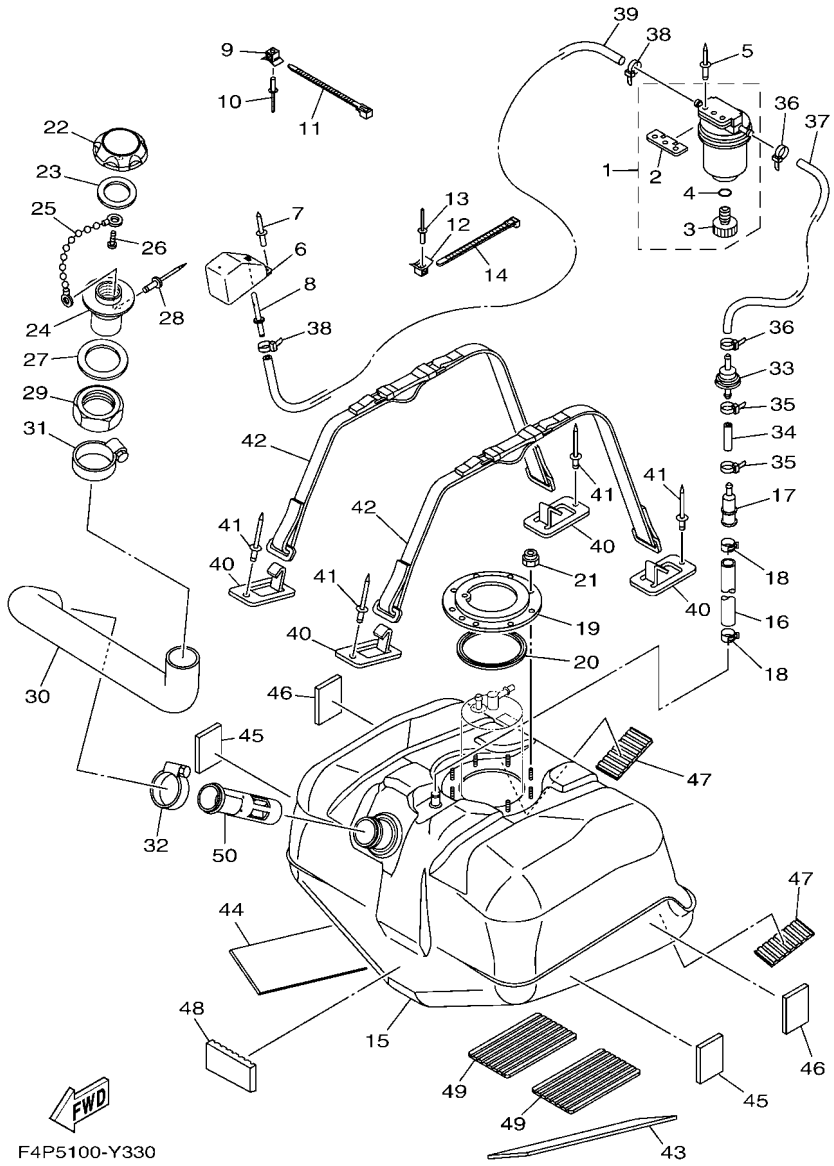

FIG. 32 FUEL TANK

REF. NO.	PART NO.	DESCRIPTION	F7M7					REMARKS
28	90267–329UR	RIVET, BLIND	1					
29	GP7–U783F–00	NUT, FUEL FILLER	1					
30	F4P–U7844–02	HOSE	1					
31	90601–155U4	BAND, HOSE 55	1					
32	90601–155U4	BAND, HOSE 55	1					
33	F3Y–U7767–00	CHECK VALVE	1					
34	GP7–U785H–01	HOSE, AIR VENT 3	1					
35	90465–11829	CLAMP	2					
36	90465–11829	CLAMP	2					
37	F1K–U785G–01	HOSE, AIR VENT	1					
38	90465–11829	CLAMP	2					
39	F0D–U7856–11	HOSE, AIR VENT 3	1					
40	F1K–U5772–04	HOOK A	4					
41	90267–489U1	RIVET,BLIND	4					
42	F2S–67743–01	BELT, TANK 1	2					
43	F2S–U759B–00	MAT 1	1					
44	F2S–U759B–00	MAT 1	1					
45	F1W–U759C–01	MAT 2	2					
46	F1W–U759C–01	MAT 2	2					
47	F1K–U759C–00	MAT 2	2					
48	F1K–U759C–00	MAT 2	1					
49	F1S–U8221–00	PAD, BATTERY	2					
50	F4L–U773D–00	TUBE	1					

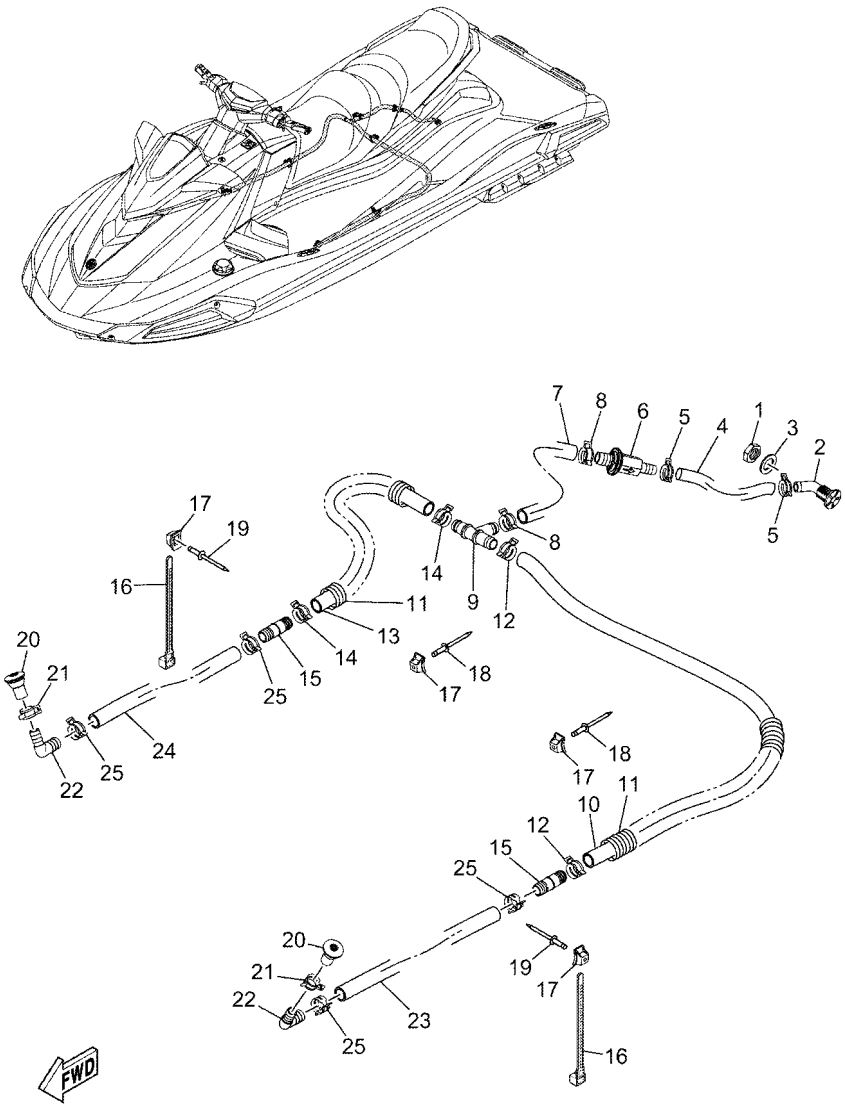

F7M1110-Z330

FIG. 33 BILGE PUMP

REF. NO.	PART NO.	DESCRIPTION	F7M7					REMARKS
1	F3X–U224B–00	NUT, DRAIN 1	1					
2	F3X–U224C–00	BODY, DRAIN 1	1					
3	F3X–U7564–00	GASKET	1					
4	F4P–U7628–00	HOSE, DRAIN 3	1					
5	90467–17802	CLIP	2					
6	F3X–U7767–00	CHECK VALVE	1					
7	F4P–U7626–00	HOSE 1	1					
8	90601–200U1	BAND	2					
9	F3X–U7857–00	JOINT,HOSE	1					
10	F4P–U7629–01	HOSE, DRAIN 2	1					
11	6EX–U773D–00	TUBE	2					
12	90601–200U1	BAND	2					
13	F7L–U2249–00	HOSE, DRAIN	1					
14	90601–200U1	BAND	2					
15	F3X–U7617–00	JOINT, DRAIN	2					
16	90464–32801	CLAMP	4					
17	F1W–U828M–00	BASE, CLAMP	4					
18	90267–48802	RIVET, BLIND	2					
19	90267–48806	RIVET, BLIND	2					
20	F4P–U2255–00	PLUG,DRAIN	2					
21	90601–200U1	BAND	2					
22	F3X–U8377–00	CONNECTOR	2					
23	F4P–U7626–00	HOSE 1	1					
24	F7L–U7626–00	HOSE 1	1					
25	90601–200U1	BAND	4					

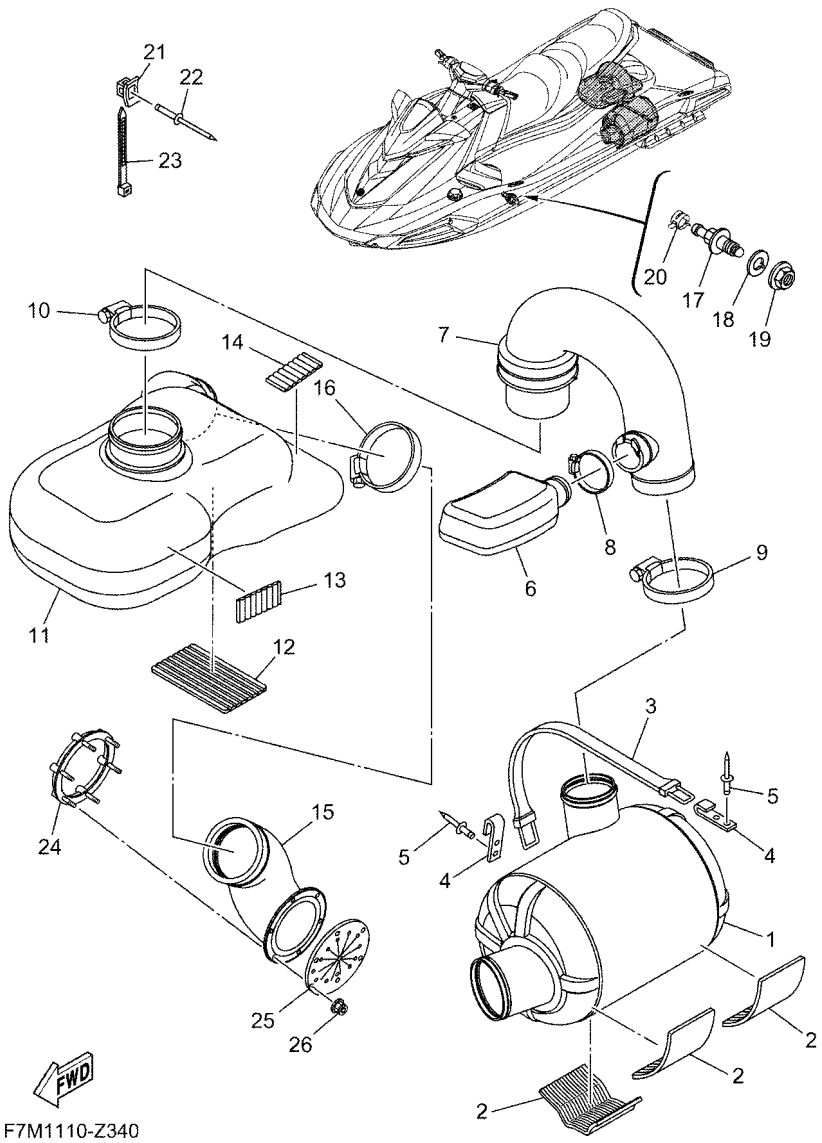

FIG. 34 EXHAUST 3

REF. NO.	PART NO.	DESCRIPTION	F7M7					REMARKS
1	F4P–U7550–00	WATER LOCK COMP.	1					
2	F1S–U8221–00	PAD, BATTERY	3					
3	EW2–67821–00	BAND, FUEL TANK	1					
4	GA7–65772–00	HOOK A	2					
5	90267–489U1	RIVET,BLIND	4					
6	F7K–U753C–01	RESONATOR 1	1					
7	F7L–U7555–01	HOSE, EXHAUST	1					
8	90601–170UG	BAND, HOSE 70	1					
9	90450–99801	HOSE CLAMP ASSY	1					
10	90450–99804	HOSE CLAMP ASSY	1					
11	F7L–U4261–00	TANK, WATER	1					
12	F1S–U8221–00	PAD, BATTERY	1					
13	F1K–U759C–00	MAT 2	1					
14	F1K–U759C–00	MAT 2	1					
15	F7K–U758D–00	HOSE,EXHAUST 3	1					
16	90450–99801	HOSE CLAMP ASSY	1					
17	F1B–U751G–10	VALVE, EXHAUST	1					
18	F1S–U757B–01	PLATE	1					
19	F2N–U142L–00	NUT, LOCK	6					
20	F2C–U753B–01	PILOT, WATER	1					
21	F2C–U7564–02	GASKET	1					
22	F2C–U2733–00	NUT	1					
23	90467–150A5	CLIP	1					
24	F1W–U828M–00	BASE, CLAMP	2					
25	90267–48806	RIVET, BLIND	2					
26	90464–32801	CLAMP	1					

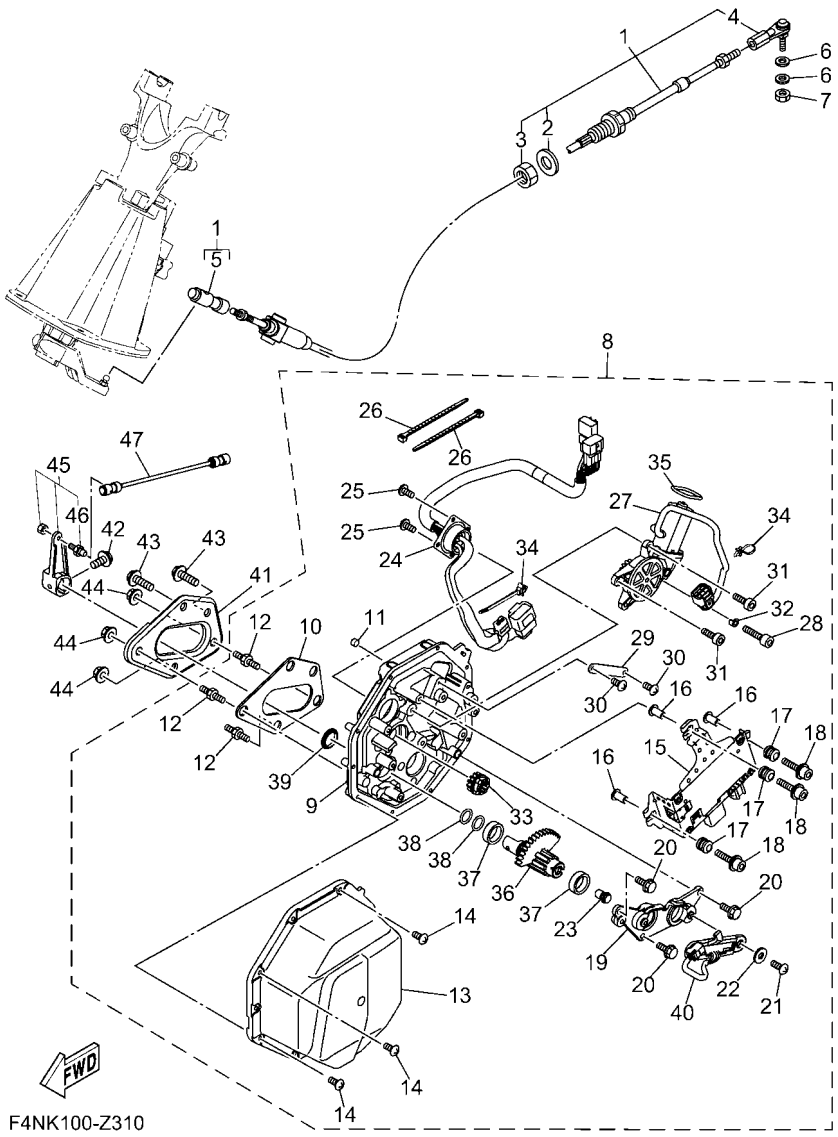

FIG. 35 CONTROL CABLE

REF. NO.	PART NO.	DESCRIPTION	F7M7					REMARKS
1	F4N–61481–01	CABLE, STEERING	1					
2	F1B–61438–00	.PACKING C	1					
3	F1B–6151S–01	.NUT	1					
4	F1B–61461–02	.STUD, JOINT BALL	1					
5	F2N–61460–00	.BALL JOINT ASSY	1					
6	90201–06906	WASHER, PLATE	2					
7	9538R–06700	NUT	1					
8	F4S–6140B–03	MOTOR ASSY	1					
9	F4S–6152K–00	.HOUSING	1					
10	F4P–63262–00	.SEAL	1					
11	F3J–613D0–00	.PLUG	1					
12	F3J–67369–00	.BOLT, STUD	3					
13	F3Y–6143J–00	.COVER	1					
14	F3Y–68198–00	.SCREW	10					
15	F4S–68197–01	.CONTROL UNIT	1					
16	90387–06119	.COLLAR	3					
17	6A0–82317–01	.DAMPER, IGNITION COIL	3					
18	F3J–613B4–20	.BOLT	3					
19	F4P–61256–00	.PLATE	1					
20	F3Y–613B3–00	.BOLT, HEXAGON	3					
21	F3J–68198–20	.SCREW	2					
22	F3J–613C3–10	.WASHER, PLAIN	2					
23	F3J–60428–00	.MAGNET, SENSOR	1					
24	F4P–68270–00	.WIRE HARNESS ASSY.	1					
25	F3J–68198–00	.SCREW	4					
26	F3J–68273–00	.CLAMP	2					
27	F4S–68352–00	.MOTOR	1					

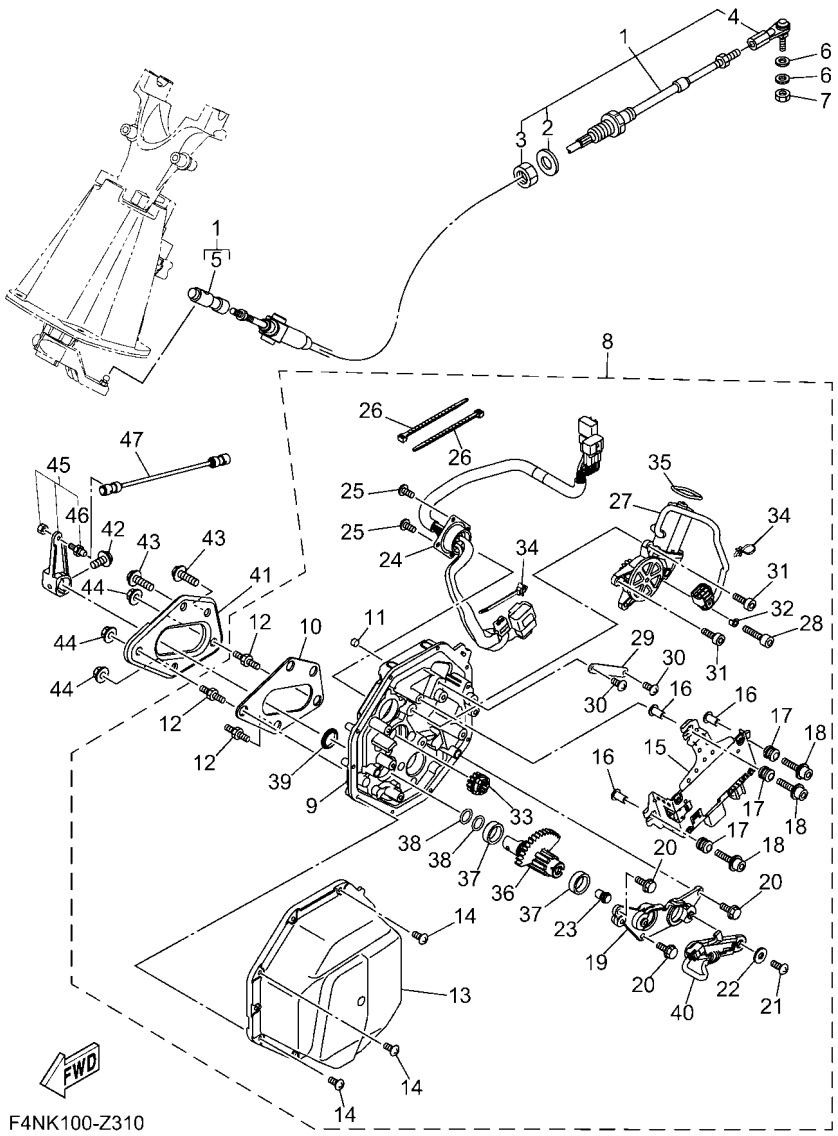

FIG. 35 CONTROL CABLE

REF. NO.	PART NO.	DESCRIPTION	F7M7					REMARKS
28	F3J–613B4–00	.BOLT	1					
29	F3Y–61348–00	.PLATE	1					
30	F3J–68198–20	.SCREW	2					
31	F3J–613B4–10	.BOLT	2					
32	F3J–61492–00	.SPACER	1					
33	F4P–60211–00	.GEAR 1	1					
34	F4P–68273–00	.CLAMP	2					
35	F4P–613A5–10	.O-RING	1					
36	F3Y–60221–10	.SHAFT, 1	1					
37	F3Y–61344–00	.BUSH	2					
38	F4P–613A5–00	.O-RING	2					
39	F4P–61344–00	.BUSH	1					
40	F4S–85887–00	.SENSOR, ANGLE	1					
41	F4P–U8285–00	PLATE	1					
42	90119–06893	BOLT, WITH WASHER	1					
43	90119–08851	BOLT, WITH WASHER	2					
44	F3Y–U142L–00	NUT, LOCK	3					
45	F3Y–6150F–00	SHIFT ARM ASSY	1					
46	6R7–42316–00	.BOLT, JOINT	1					
47	F3J–6150D–00	ROD ASSY 2	1					

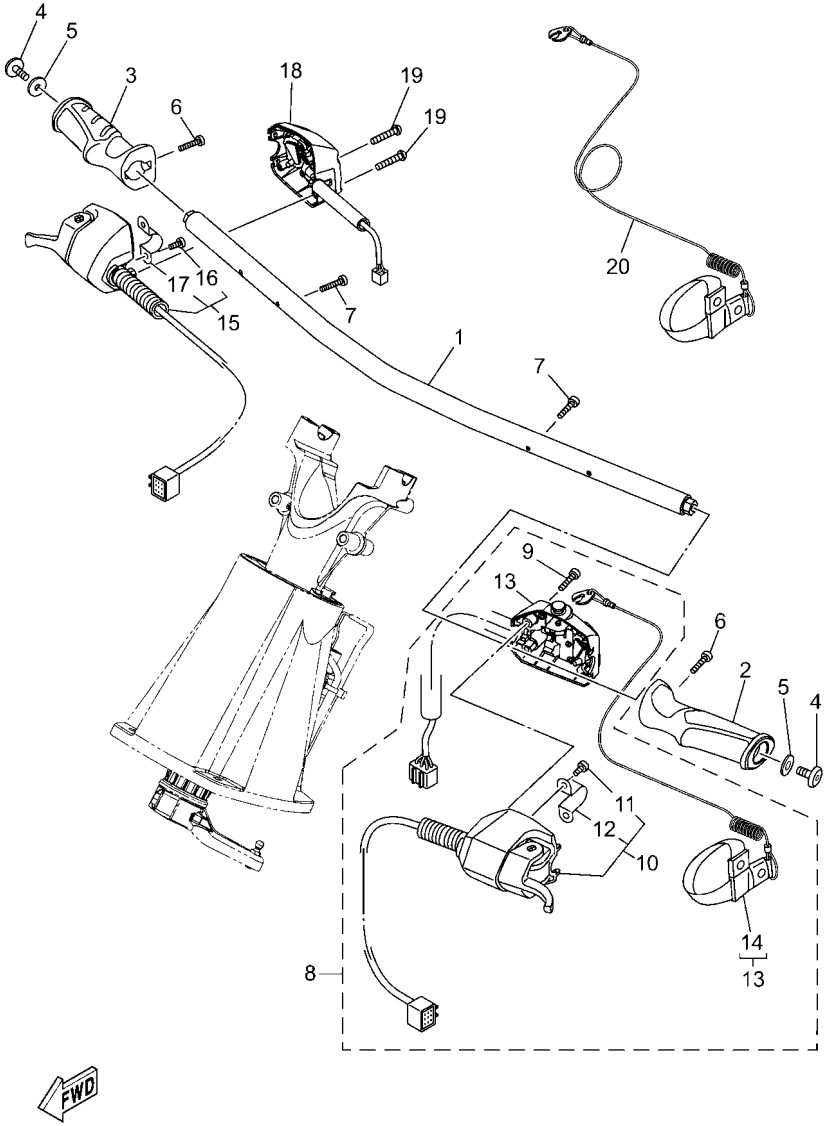

F7M6100-0350

FIG. 36 STEERING 1

REF. NO.	PART NO.	DESCRIPTION	F7M7					REMARKS
1	F4N–U1552–00	HANDLE	1					
2	F4P–U155C–00	GRIP,HANDLE	1					
3	F4P–U155D–00	GRIP, HANDLE	1					
4	90110–06382	BOLT, HEXAGON SOCKET HEAD	2					
5	90201–068G0	WASHER, PLATE	2					
6	F2S–U1516–00	BOLT	2					
7	91380–04030	BOLT	2					
8	F7K–68310–11	SWITCH BOX ASSY	1					
9	6CS–6725F–00	.BOLT, THROTTLE	2					
10	F4P–26411–12	.SHIFT LEVER ASSY	1					
11	F4P–6725F–00	..BOLT, THROTTLE	2					
12	F4P–61368–00	..SUPPORT	1					
13	F7K–8259E–10	.SWITCH ASSY	1					
14	EW2–68348–00	..LANYARD, STOP SWITCH	1					
15	F4P–14305–12	THROTTLE LEVER COMP	1					
16	F4P–6725F–00	.BOLT, THROTTLE	2					
17	F4P–61368–00	.SUPPORT	1					
18	F7K–81860–00	SWITCH ASSY	1					
19	6CS–6725F–00	BOLT, THROTTLE	2					
20	EW2–68348–00	LANYARD, STOP SWITCH	1					

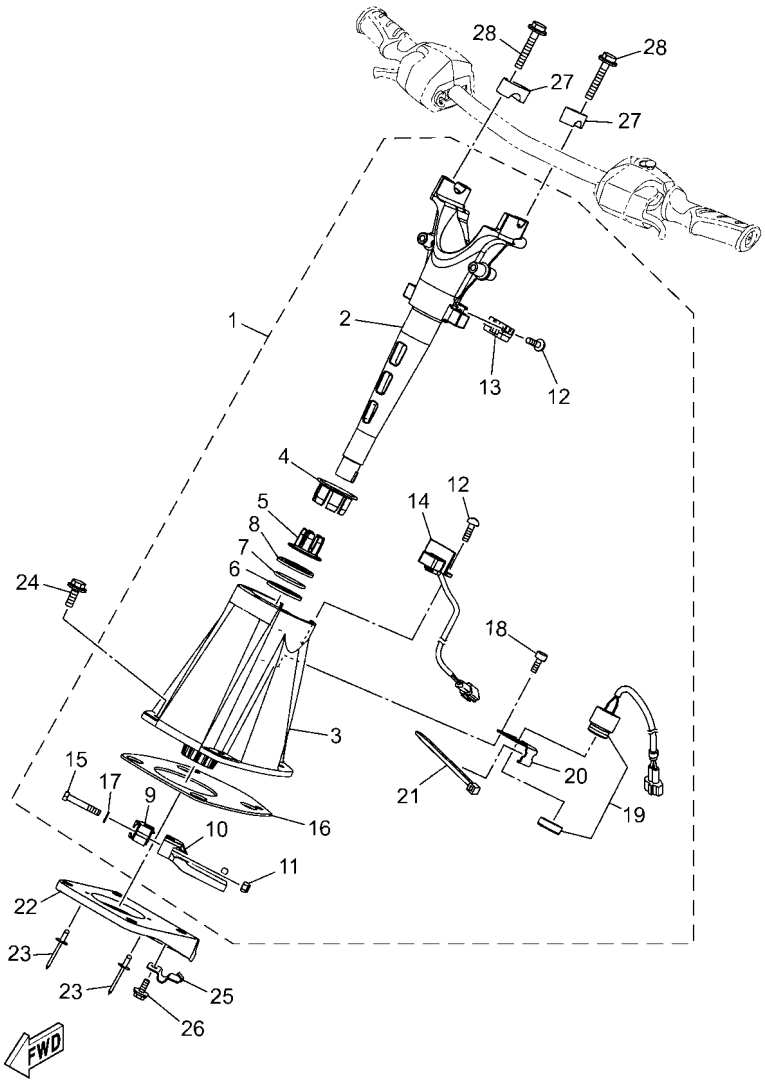

F7M6100-0360

FIG. 37 STEERING 2

REF. NO.	PART NO.	DESCRIPTION	F7M7					REMARKS
1	F4N–61400–10	STEERING MASTER ASSY	1					
2	F4N–6152D–00	.SHAFT	1					
3	F5M–6152M–00	.HOUSING ASSY	1					
4	F5M–6134M–00	.BUSH	1					
5	F5M–6134M–10	.BUSH	1					
6	F5M–61554–00	.PLATE, RETAINING	1					
7	F5M–613C5–00	.O-RING	1					
8	F5M–6155G–00	.PLATE, COVER	1					
9	F5M–61339–00	.HOLDER, STOPPER	1					
10	F5M–6153R–00	.ARM ASSY.	1					
11	95720–08300	.NUT, SELF-LOCKING	2					
12	F2X–613C1–00	.SCREW	3					
13	F2X–6838C–01	.MAGNET	1					
14	F2X–6838B–02	.SENSOR, MAGNET	1					
15	F1K–61355–00	.BOLT	2					
16	F5M–6143C–00	.SEAL, RUBBER	1					
17	F5M–6153P–00	.WASHER	2					
18	F4N–613C1–00	.SCREW	2					
19	F1S–68341–00	.BUZZER	1					
20	F2P–6146H–00	.SPACER, BRKT.	1					
21	703–82591–00	.BAND	1					
22	F3Y–U1467–00	BRACKET,STOPPER CABLE	1					
23	90267–489U2	RIVET, BLIND	2					
24	90119–08836	BOLT, WITH WASHER	4					
25	F1K–U1468–03	STOPPER, CABLE	1					
26	90119–069UH	BOLT, WITH WASHER	1					
27	EU0–23814–32	HOLDER, HANDLE UPPER	2					

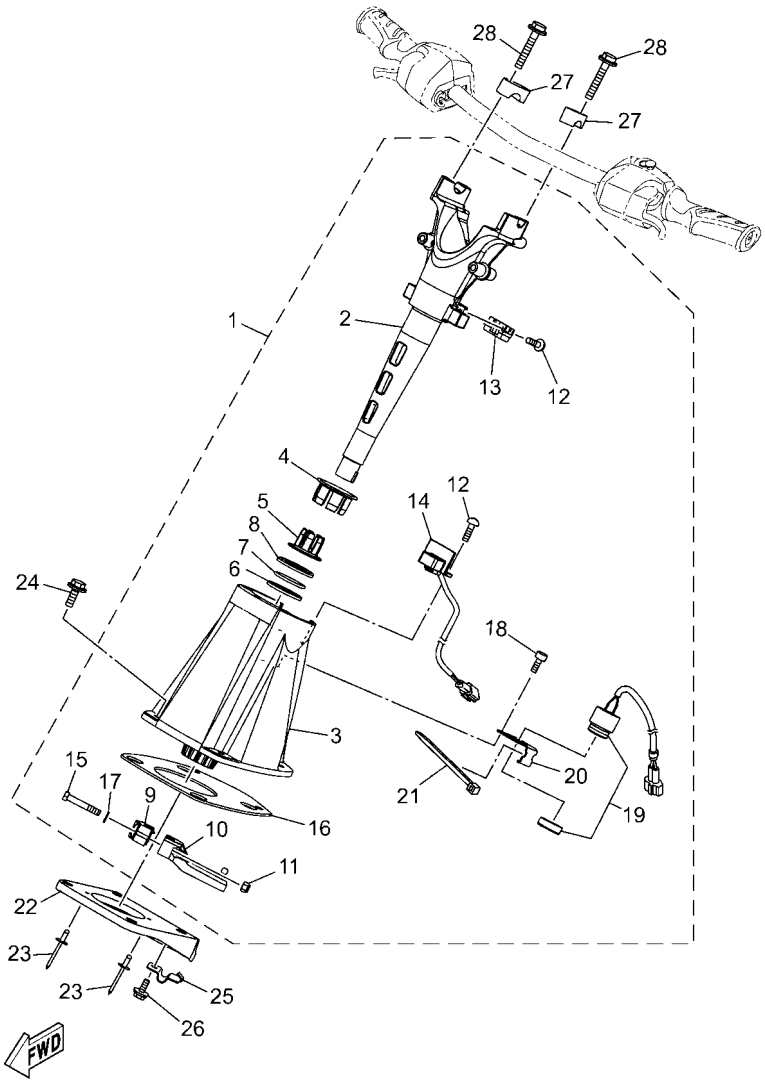

F7M6100-0360

FIG. 37 STEERING 2

REF. NO.	PART NO.	DESCRIPTION	F7M7					REMARKS
28	90119–08827	BOLT, WITH WASHER	4					

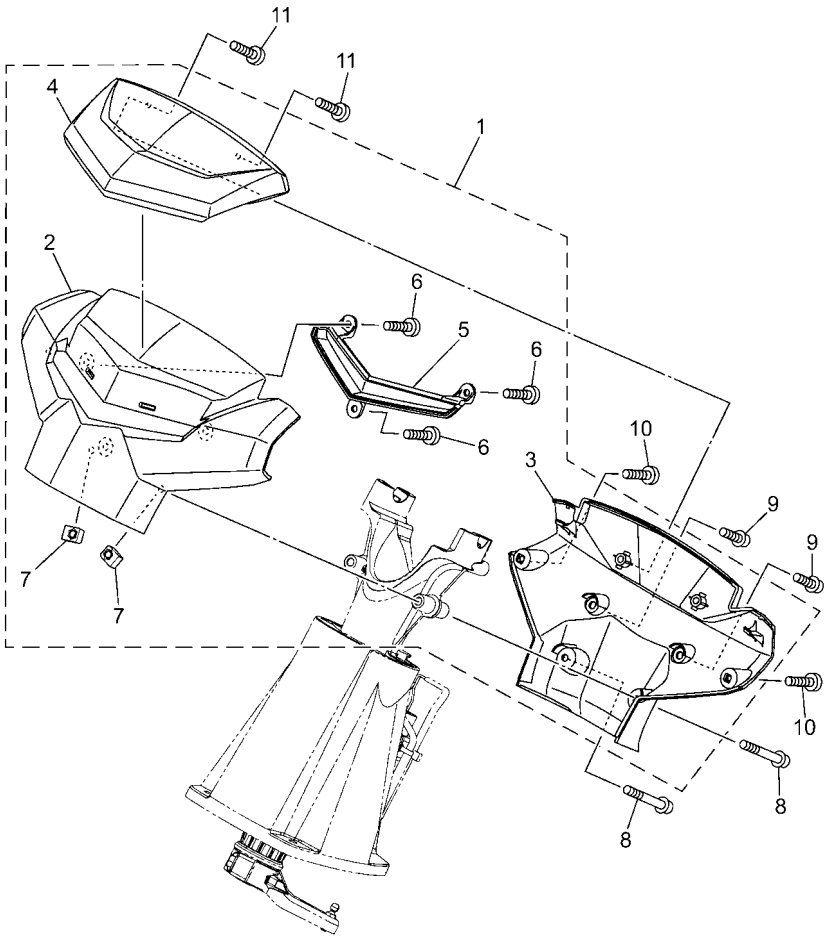

F7M6100-0370

FIG. 38 STEERING 3

REF. NO.	PART NO.	DESCRIPTION	F7M7					REMARKS
1	F4N–U142A–90	STEERING PAD COMP	1					
2	F4N–U143D–00	.PAD, STEERING 1	1					
3	F4N–U143E–00	.PAD, STEERING 2	1					
4	F4N–U142D–00	.COVER, PAD	1					
5	F4N–U142M–60	.BASE, PAD	1					
6	F2S–U13C1–00	.SCREW	3					
7	F3X–U517E–00	.NUT	2					
8	F3Y–U1355–01	BOLT	2					
9	F3Y–U2624–00	BOLT	2					
10	F4N–U13C1–00	SCREW	2					
11	F2S–U13C1–00	SCREW	2					

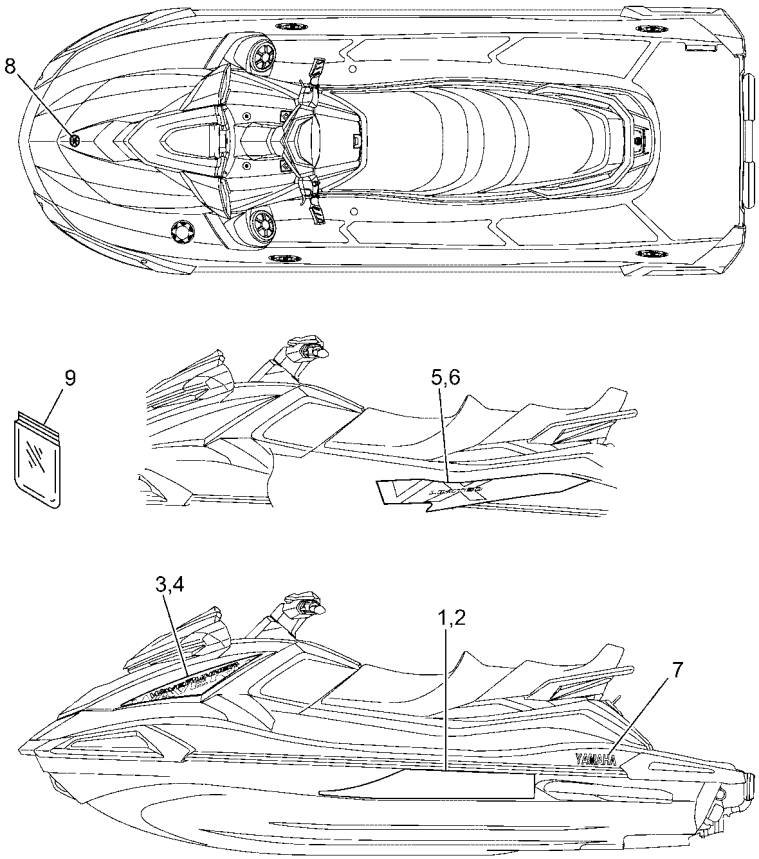

F7M7100-1390

FIG. 39 GRAPHICS

REF. NO.	PART NO.	DESCRIPTION	F7M7					REMARKS
1	F9L–U417B–00	GRAPHIC 1 (LH)	1					
2	F9L–U417C–00	GRAPHIC 2 (RH)	1					
3	F9L–U417F–00	GRAPHIC 5 (LH)	1					
4	F9L–U417G–00	GRAPHIC 6 (RH)	1					
5	F7M–U417H–60	GRAPHIC 7 (LH)	1					
6	F7M–U417J–60	GRAPHIC 8 (RH)	1					
7	F5G–U4116–20	MARK, YAMAHA 3	2					
8	F3Y–U411H–02	EMBLEM, TUNING FORK	1					
9	F3Y–U5901–00	BAG, VINYL	1					

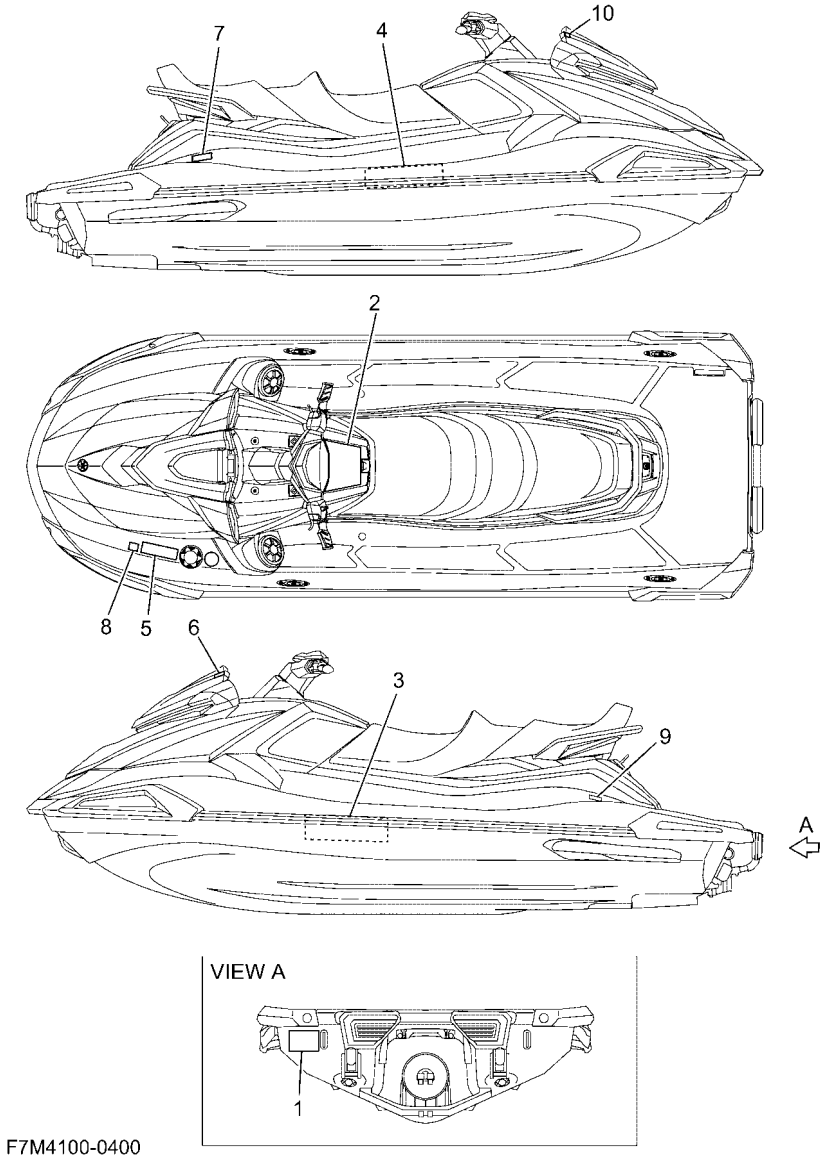

FIG. 40 IMPORTANT LABELS

REF. NO.	PART NO.	DESCRIPTION	F7M7					REMARKS
1	F7M–U418F–00	LABEL, RIGHTING	1					
2	F4N–U41B1–10	LABEL, WARNING UNIFORM 1	1					
3	F7M–U41B1–00	LABEL, WARNING UNIFORM 1	1					
4	F7M–U41B1–20	LABEL, WARNING UNIFORM 1	1					
5	F1S–U415B–11	LABEL, WARNING(FUEL)	1					
6	F7M–U41F5–20	LABEL, FIRE EXTINGUISHER 1	1					
7	F3V–U416A–10	WARNING LABEL ASSY	1					
8	B4F–F817K–00	LABEL, FUEL	1					FOR EUR
9	F7M–U419E–00	LABEL 4	1					FOR CAN
10	F7M–U413P–00	LABEL, BUILDERS PLATE	1					FOR EUR

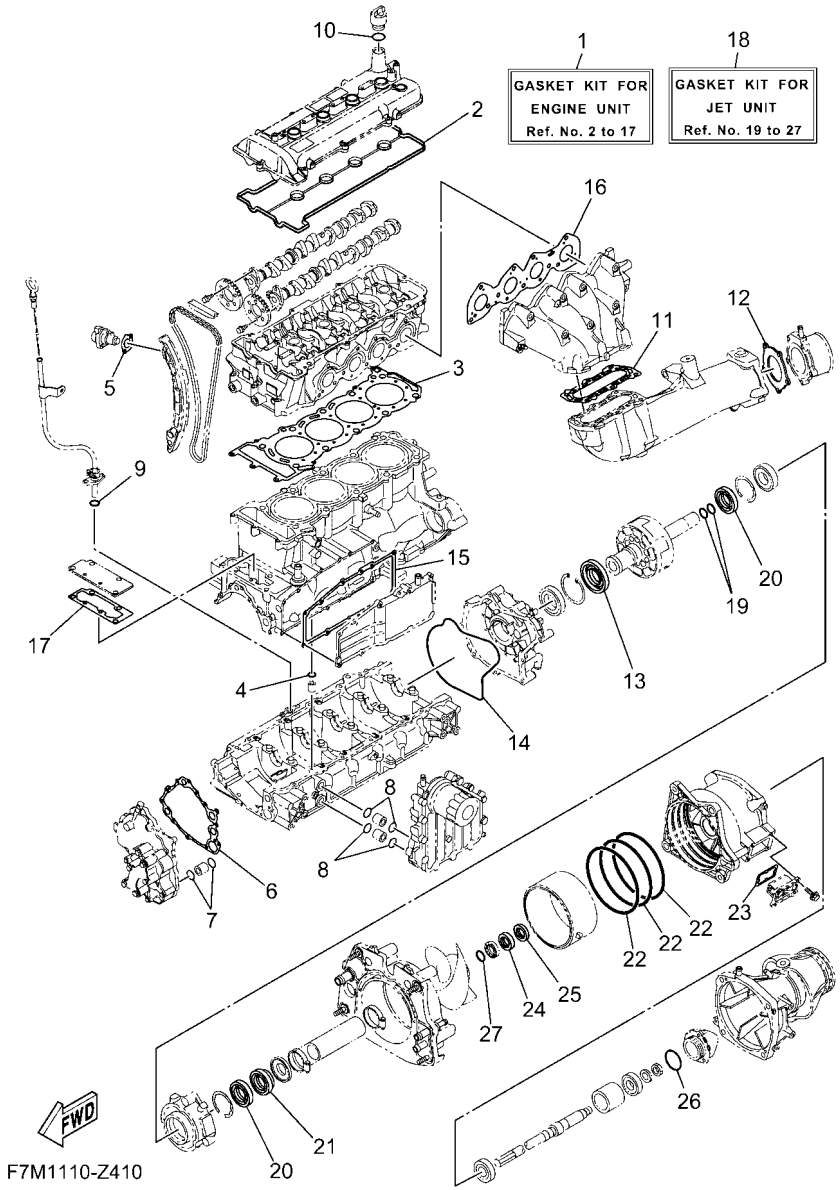

FIG. 41 REPAIR KIT 1

REF. NO.	PART NO.	DESCRIPTION	F7M7					REMARKS
1	6LE–W0001–00	GASKET KIT FOR ENGINE UNIT	1					
2	6LE–11193–00	.GASKET, HEAD COVER 1	1					
3	6LE–11181–00	.GASKET, CYLINDER HEAD 1	1					
4	93210–11453	.O-RING	1					
5	6LE–12213–00	.GASKET, TENSIONER CASE	1					
6	6S5–13563–00	.GASKET	1					
7	93210–21631	.O-RING	2					
8	93210–18322	.O-RING	4					
9	93210–12016	.O-RING	1					
10	93210–19123	.O-RING	1					
11	6S5–14739–00	.GASKET, MUFFLER DAMPER 1	1					
12	6BH–14749–00	.GASKET, MUFFLER DAMPER 2	1					
13	6LE–81167–00	.OIL SEAL	1					
14	6S5–81168–00	.O-RING	1					
15	6BH–13557–00	.GASKET	1					
16	6LE–14613–00	.GASKET, EXHAUST PIPE	1					
17	6BH–1131B–00	.GASKET, COVER	1					
18	6LE–W0001–20	GASKET KIT FOR JET UNIT	1					
19	93210–22MF1	.O-RING	2					
20	93102–29008	.OIL SEAL	2					
21	93102–29009	.OIL SEAL	1					
22	93211–65801	.O-RING	3					
23	66V–42414–00	.O-RING	1					
24	93102–31009	.OIL SEAL	1					
25	93101–31001	.OIL SEAL	1					
26	93210–54010	.O-RING	1					
27	93210–30611	.O-RING	1					

PART NO.	REF. NO.
6LE–11102–00	2 – 2
6LE–1110M–00	1 – 10
6BH–11119–00	2 – 17
6BH–1111E–00	2 – 15
5VY–1111G–00	2 – 14
6LE–1111K–00	1 – 15
6LE–1111M–01	1 – 11
6LE–1111N–00	1 – 12
6S5–11133–10	2 – 3
6S5–11166–10	11 – 1
6S5–11167–10	11 – 4
6LE–11181–00	2 – 12
	41 – 3
6LE–11191–00	1 – 1
6LE–11193–00	1 – 3
	41 – 2
69J–11301–11	3 – 9
6BH–1131B–00	3 – 23
	41 – 17
6BH–1131C–00	3 – 22
6S5–1131M–10–8P	3 – 15
68V–11325–02	3 – 10
6LE–11328–00	1 – 13
67F–11328–01	3 – 11
6LE–11411–00	4 – 1
6LE–11416–00	4 – 2
6LE–11416–10	4 – 2
6LE–11416–20	4 – 2
6LE–11416–30	4 – 2
6LE–11416–40	4 – 2
6S5–11459–01	4 – 14
6LE–11603–00	4 – 4
6LE–11631–00–B0	4 – 3
6ET–11633–00	4 – 5
6S5–11650–10	4 – 7
6S5–11654–10	4 – 8
6LE–11656–00	4 – 9
6LE–11656–10	4 – 9
6LE–11656–20	4 – 9
6LE–11656–30	4 – 9
6S5–12111–01	5 – 5
6S5–12113–00	5 – 8
6S5–12116–00	5 – 7
6S5–12117–00	5 – 9
3LD–12118–00	5 – 10
51Y–12119–00	5 – 11
6S5–12121–00	5 – 6
6S5–12153–00	5 – 13

PART NO.	REF. NO.
3LD–12168–00	5 – 12
3LD–12168–20	5 – 12
3LD–12168–40	5 – 12
3LD–12168–60	5 – 12
3LD–12168–80	5 – 12
3LD–12168–A0	5 – 12
3LD–12168–F0	5 – 12
3LD–12168–H1	5 – 12
3LD–12168–K1	5 – 12
3LD–12168–M1	5 – 12
3LD–12168–R1	5 – 12
3LD–12168–U1	5 – 12
3LD–12168–W1	5 – 12
3LD–12168–Y1	5 – 12
3LD–12169–11	5 – 12
3LD–12169–31	5 – 12
3LD–12169–50	5 – 12
3LD–12169–70	5 – 12
3LD–12169–90	5 – 12
3LD–12169–E0	5 – 12
3LD–12169–G0	5 – 12
3LD–12169–J0	5 – 12
3LD–12169–L0	5 – 12
6LE–12171–00	5 – 1
6ET–12176–00	5 – 3
6BH–12181–10	5 – 2
6LE–12210–00	5 – 18
6LE–12213–00	5 – 19
	41 – 5
6S5–12228–01	2 – 9
6BH–12241–00	5 – 22
6ET–12251–00	5 – 21
6ET–12252–00	5 – 15
6BH–12279–00	5 – 16
6S5–12289–00	4 – 11
6D3–12411–00	3 – 37
6BH–12413–00	3 – 38
6S5–1243E–01	13 – 4
60E–12443–00	13 – 30
6LE–1244H–00	13 – 14
6HL–12456–00	2 – 10
6LE–1246A–00	13 – 23
6LE–12576–00	13 – 21
6S5–12578–00	3 – 40
63M–12580–10	13 – 28
60E–12581–00	13 – 27
6BH–12584–00	13 – 7
6CN–12588–00	13 – 16

PART NO.	REF. NO.
6S5–12589–01	13 – 12
6S5–12858–00	10 – 2
6LE–12880–00	6 – 5
6S5–1310A–25	9 – 1
6BH–1319K–00	3 – 29
6BH–13300–12	8 – 1
6S5–13317–10	9 – 4
6S5–13337–10	3 – 19
6S5–13405–11	9 – 2
69J–13440–05	10 – 1
60E–13446–00	10 – 12
6S5–13446–10	8 – 5
6BH–13470–21	10 – 3
6S5–13477–00	9 – 3
6BH–13556–00	10 – 4
8FP–13556–10	6 – 10
6BH–13557–00	3 – 16
	41 – 15
6S5–13563–00	8 – 2
	41 – 6
6LE–13641–00	6 – 2
6LE–13750–01	6 – 1
6S5–13761–10	6 – 8
6S5–13907–05	22 – 48
6LE–14126–00	6 – 4
6LE–14156–00	6 – 3
68V–1416A–00	6 – 9
F4P–14305–12	36 – 15
6CS–14445–01	6 – 19
6CS–14446–00	6 – 7
6LE–14572–00	6 – 18
6LE–14613–00	12 – 1
	41 – 16
6LE–14711–00	12 – 2
6LE–14721–00	12 – 6
6S5–14739–00	12 – 7
	41 – 11
6BH–14749–00	12 – 14
	41 – 12
6CS–1475A–00	12 – 20
6S5–14771–00	12 – 11
6BH–14784–01	12 – 15
6LE–15109–10	3 – 1
6ET–15362–00	3 – 26
3Y1–15363–10	1 – 7
6S5–15486–10	9 – 5
5EL–15511–00	19 – 6
6LE–15515–00	18 – 3

PART NO.	REF. NO.
6S5–15517–00	18 – 5
6S5–15521–00	18 – 4
6S5–15590–00	18 – 1
6S5–17031–00	4 – 16
6S5–17525–01	4 – 13
6S5–17572–01	4 – 10
6BH–17586–11	4 – 15
EU0–23814–32	37 – 27
70R–24489–00	32 – 4
6AN–2450B–10	6 – 14
70R–24543–00	32 – 3
F4P–26411–12	36 – 10
6EX–2812A–00	20 – 17
6BH–41661–00–94	24 – 4
6BH–41662–00–94	24 – 5
6R7–42316–00	35 – 46
66V–42414–00	14 – 9
	41 – 23
67X–44517–10	24 – 1
663–45119–00	15 – 10
6ET–45613–00	15 – 8
6S5–45813–01–94	4 – 12
6BH–4581J–01	15 – 16
68N–5112T–00	28 – 14
F4P–60211–00	35 – 33
F3Y–60221–10	35 – 36
F3J–60428–00	35 – 23
F7M–60891–00	22 – 41
F4P–61256–00	35 – 19
F5M–61339–00	37 – 9
F3Y–61344–00	35 – 37
F4P–61344–00	35 – 39
F3Y–61348–00	35 – 29
F5M–6134M–00	37 – 4
F5M–6134M–10	37 – 5
F1K–61355–00	37 – 15
F4P–61368–00	36 – 12
	36 – 17
F4P–613A5–00	35 – 38
F4P–613A5–10	35 – 35
F3Y–613B3–00	35 – 20
F3J–613B4–00	35 – 28
F3J–613B4–10	35 – 31
F3J–613B4–20	35 – 18
F2X–613C1–00	37 – 12
F4N–613C1–00	37 – 18
F3J–613C3–10	35 – 22
F5M–613C5–00	37 – 7

PART NO.	REF. NO.
F3J–613D0–00	35 – 11
F4N–61400–10	37 – 1
F4S–6140B–03	35 – 8
F1B–61438–00	35 – 2
F5M–6143C–00	37 – 16
F3Y–6143J–00	35 – 13
F2N–61460–00	35 – 5
F1B–61461–02	35 – 4
F2P–6146H–00	37 – 20
F4N–61481–01	35 – 1
F3J–61492–00	35 – 32
F3J–6150D–00	35 – 47
F3Y–6150F–00	35 – 45
F1B–6151S–01	35 – 3
F4N–6152D–00	37 – 2
F4S–6152K–00	35 – 9
F5M–6152M–00	37 – 3
F5M–6153P–00	37 – 17
F5M–6153R–00	37 – 10
F5M–61554–00	37 – 6
F5M–6155G–00	37 – 8
F1K–61624–00	28 – 23
F0X–61637–00	28 – 26
EU0–61652–00	13 – 32
	28 – 2
F0X–61652–01	28 – 27
EW2–62142–00	32 – 2
F1G–62149–00	32 – 8
F2F–6214A–00	32 – 1
GP7–62159–02	32 – 6
F4P–63262–00	35 – 10
GA7–65772–00	34 – 4
6CS–6725F–00	36 – 9
	36 – 19
F4P–6725F–00	36 – 11
	36 – 16
F3J–67369–00	35 – 12
F2S–67743–01	32 – 42
F1B–67747–00	32 – 20
EW2–67821–00	34 – 3
F4S–68197–01	35 – 15
F3J–68198–00	35 – 25
F3Y–68198–00	35 – 14
F3J–68198–20	35 – 21
	35 – 30
F4P–68270–00	35 – 24
F3J–68273–00	35 – 26
F4P–68273–00	35 – 34

PART NO.	REF. NO.
F7M–68275–00	22 – 42
6S5–682E0–10	22 – 49
F7K–68310–11	36 – 8
F1S–68341–00	37 – 19
EW2–68348–00	36 – 14
	36 – 20
F4S–68352–00	35 – 27
F2X–6838B–02	37 – 14
F2X–6838C–01	37 – 13
6D3–81147–00	6 – 12
6LE–81167–00	18 – 13
	41 – 13
6S5–81168–00	18 – 17
	41 – 14
6S5–81315–01	21 – 16
6S5–81328–00	18 – 18
6S5–81337–31	18 – 11
6S5–81364–11	18 – 24
6ET–81410–01	18 – 7
6LE–81450–00	18 – 6
6S5–81800–00	19 – 1
6S5–81810–00	19 – 13
6S5–81820–00	19 – 12
6S5–81826–00	19 – 10
6S5–81830–00	19 – 3
6S5–81840–00	19 – 8
11H–81844–00	19 – 2
4G0–81844–00	19 – 4
5EL–81845–00	19 – 11
6CS–81845–11	20 – 3
3TB–81847–00	19 – 9
1J7–81847–60	19 – 5
5A8–81850–10	19 – 14
F7K–81860–00	36 – 18
1B7–81940–00	20 – 26
6S5–81942–21	20 – 4
6ET–81948–00	20 – 9
6CS–81953–00	20 – 28
6EX–8195A–00	20 – 16
6EK–81960–10	21 – 1
6LE–81972–00	21 – 3
6ET–81975–01	21 – 2
6JP–82115–00	20 – 24
6JP–82116–00	22 – 51
6CS–82117–00	20 – 25
67F–82151–00	20 – 13
6EX–82151–00	20 – 15
67F–82151–10	20 – 14

PART NO.	REF. NO.
67F–82151–30	20 – 11
67F–82151–40	20 – 12
6EX–82170–02	20 – 10
6S5–82310–10	21 – 8
68V–82317–01	1 – 4
6A0–82317–01	20 – 19
	35 – 17
68V–82504–00	21 – 15
60E–82556–10	22 – 50
6ET–82576–00	20 – 21
1UA–82591–00	21 – 11
703–82591–00	37 – 21
6EM–82599–00	20 – 31
F7K–8259E–10	36 – 13
6MD–8259L–02	20 – 30
4P9–83591–00	21 – 12
60E–83627–00	20 – 5
6LE–83688–00	6 – 11
6EY–84385–00	13 – 31
6CS–85516–00	3 – 30
6LE–8572F–00	3 – 28
6AA–85790–00	21 – 17
F4S–85887–00	35 – 40
60E–85896–02	21 – 13
6ME–8591A–00	20 – 6
6EY–8591S–00	20 – 8
6S5–E118E–02	1 – 9
6ET–E2289–00	15 – 12
67X–E2590–00	13 – 26
67X–E2590–10	13 – 26
6S5–E4410–02	7 – 6
6LE–E4419–00	7 – 12
6S5–E4436–00	7 – 8
6S5–E4451–01	7 – 7
6S5–E4752–01	12 – 17
B4F–F817K–00	40 – 8
6S5–G2717–00	7 – 9
6CN–G4532–00	24 – 2
6CN–G4574–00	24 – 3
6S5–G5332–00	15 – 3
6S5–G5511–00	14 – 16
6CS–G5538–00	14 – 12
6S5–G5593–00	15 – 11
6CS–G5831–21	14 – 1
6GN–G6882–00	14 – 8
5FU–H2100–21	22 – 3
F7M–H21E1–10	26 – 19
F7M–H254B–01	26 – 18

PART NO.	REF. NO.
6BH–R1142–10	7 – 13
6HM–R1312–10	14 – 4
6EX–R1313–00	14 – 34
6ET–R1314–10	16 – 4
6EX–R1318–01	14 – 25
6LE–R1321–00	14 – 22
6S5–R1323–00	15 – 1
6AN–R1326–00	14 – 19
6HH–R1337–00	14 – 6
6ET–R1341–10	16 – 1
6ET–R1342–10	16 – 2
6BH–R1348–00	14 – 23
6S5–R1381–01	15 – 15
6EY–R1959–00	14 – 37
6S5–R2358–00	16 – 11
F7M–U0392–00	23 – 10
F7M–U0392–10	23 – 14
F4P–U1355–00	26 – 10
F3Y–U1355–01	38 – 8
F2S–U13C1–00	25 – 3
	25 – 14
	26 – 12
	27 – 26
	27 – 28
	38 – 6
	38 – 11
F4N–U13C1–00	38 – 10
F4N–U142A–90	38 – 1
F4N–U142D–00	38 – 4
F2N–U142L–00	22 – 9
	22 – 45
	22 – 47
	26 – 34
	26 – 37
	27 – 3
	27 – 15
	29 – 3
	29 – 14
	29 – 22
	29 – 27
	29 – 32
	29 – 35
	34 – 19
F3Y–U142L–00	25 – 29
	28 – 46
	31 – 27
	35 – 44
F4N–U142M–60	38 – 5

PART NO.	REF. NO.
F4N–U143D–00	38 – 2
F4N–U143E–00	38 – 3
F4P–U1454–00	25 – 33
F7K–U1454–00	29 – 6
6GA–U1461–10	16 – 14
F3Y–U1467–00	37 – 22
F1K–U1468–03	37 – 25
F2S–U1516–00	36 – 6
F3Y–U153K–00	25 – 6
	27 – 12
	27 – 24
F4N–U1552–00	36 – 1
F4P–U155C–00	36 – 2
F4P–U155D–00	36 – 3
F2N–U1628–10	28 – 16
	31 – 32
F4G–U163A–02	28 – 62
F1B–U1653–03	28 – 22
F7M–U1708–10	26 – 14
F2C–U1743–00	22 – 13
	25 – 13
F2X–U2127–00	30 – 1
F2N–U213G–02	30 – 5
F2X–U2157–00	30 – 2
F7L–U2249–00	33 – 13
F3X–U224B–00	33 – 1
F3X–U224C–00	33 – 2
F4P–U2255–00	33 – 20
F1S–U2280–02	28 – 36
F4G–U2284–10	28 – 63
F1S–U2285–01	28 – 37
F4N–U2504–R0	29 – 23
F4N–U2504–S0	29 – 28
F4N–U2510–R0	29 – 7
F4N–U2510–S0	29 – 15
F4N–U2511–00	29 – 1
F4N–U2512–00	29 – 4
F4N–U2514–J0	29 – 8
F4N–U2514–K0	29 – 16
F4N–U2519–10	29 – 5
F4P–U252C–02	29 – 33
F4N–U255C–J0	29 – 24
F4N–U255C–K0	29 – 29
F3Y–U2624–00	38 – 9
F4P–U2663–01	25 – 9
F4P–U2664–00	31 – 3
F1K–U266B–00	25 – 5
	26 – 5

PART NO.	REF. NO.
F4P–U266B–00	31 – 12
F4P–U266D–00	31 – 8
F4P–U266E–00	31 – 31
F1W–U269B–00	28 – 1
F4N–U271B–00	31 – 21
F3X–U2723–00	26 – 15
F2C–U2733–00	34 – 22
F4N–U273B–00	17 – 2
F4N–U278A–00	28 – 48
F2S–U278F–01	28 – 49
F2S–U278H–01	28 – 50
F4N–U2875–00	26 – 25
F4L–U3222–01	17 – 3
F4S–U351H–10	29 – 37
F4S–U351J–10	29 – 38
F4S–U351K–10	29 – 39
F4S–U351M–10	29 – 40
F4S–U351N–10	29 – 41
F4S–U351P–10	29 – 42
F4N–U351R–10	28 – 55
F4N–U351S–10	28 – 58
F4N–U353B–00–PC	27 – 8
F4N–U353C–00–PC	27 – 20
F4S–U3581–11	29 – 36
F6G–U371A–60	31 – 1
F6G–U371B–60	31 – 2
F6G–U372A–60	31 – 6
F6G–U372B–60	31 – 7
F4G–U372G–00	31 – 33
F4P–U3743–00	31 – 11
F1W–U3768–01	25 – 10
GH1–U3774–00	31 – 13
	31 – 22
F4N–U377B–00–P6	27 – 1
F4N–U377C–00–P6	27 – 13
F2C–U3850–00	31 – 4
F1B–U3850–02	31 – 9
F5G–U4116–20	39 – 7
F3Y–U411H–02	39 – 8
F7M–U413P–00	40 – 10
F1S–U415B–11	40 – 5
F3V–U416A–10	40 – 7
F9L–U417B–00	39 – 1
F9L–U417C–00	39 – 2
F9L–U417F–00	39 – 3
F9L–U417G–00	39 – 4
F7M–U417H–60	39 – 5
F7M–U417J–60	39 – 6

PART NO.	REF. NO.
F7M–U418F–00	40 – 1
F7M–U419E–00	40 – 9
F7M–U41B1–00	40 – 3
F4N–U41B1–10	40 – 2
F7M–U41B1–20	40 – 4
F7M–U41F5–20	40 – 6
F2C–U4256–00	22 – 34
	22 – 37
F7L–U4261–00	34 – 11
F4P–U4445–00	25 – 28
F4N–U4705–01	26 – 24
F4P–U475B–00	25 – 31
F4P–U475F–00	25 – 32
F7K–U491K–00	29 – 2
	29 – 9
	29 – 17
	29 – 26
	29 – 30
	29 – 34
F3Y–U491K–02	31 – 17
F3X–U4949–00	29 – 12
	29 – 20
GP7–U4953–10	28 – 19
	31 – 34
F7M–U4953–20	28 – 20
	28 – 21
F4N–U513M–00	26 – 13
F4P–U515A–00	25 – 24
F4P–U515C–00	25 – 21
	25 – 23
	25 – 27
F4P–U515D–01	25 – 18
F4N–U515N–02–PG	25 – 4
F4N–U515P–00	25 – 11
F4P–U516R–01	26 – 21
	31 – 19
F2X–U5175–00	26 – 7
	27 – 6
	27 – 18
F4N–U517B–00–PD	25 – 1
F4N–U517C–00	25 – 12
F3X–U517E–00	26 – 2
	26 – 6
	26 – 16
	27 – 5
	27 – 17
	38 – 7
F4P–U517F–00	26 – 3

PART NO.	REF. NO.
F4N–U517V–00	25 – 2
F4N–U517W–01–PA	27 – 11
F4N–U517X–01–PA	27 – 23
F4P–U518E–00	25 – 25
F4N–U519D–02	26 – 23
F4N–U519G–01	25 – 8
F4N–U5554–00	26 – 4
F1K–U5772–04	26 – 26
	32 – 40
F3Y–U5901–00	39 – 9
F4N–U590D–70	25 – 34
F4N–U590E–70	25 – 36
F4P–U591A–00	31 – 28
F4P–U591C–00	31 – 29
F4P–U591D–00	31 – 30
F4N–U591L–00	26 – 17
F2X–U5983–00	26 – 29
F4P–U7243–00	25 – 20
F4P–U7256–00	25 – 26
F1S–U725E–01	14 – 38
F4P–U72B7–00	17 – 7
F2X–U72C0–00	17 – 1
6CN–U72M2–00	14 – 26
F2M–U732B–00	24 – 14
	24 – 15
F2S–U732B–00	24 – 12
EU0–U7354–00–01	24 – 11
EU0–U7354–00–03	24 – 11
EU0–U7354–00–05	24 – 11
EU0–U7354–00–10	24 – 11
EU0–U7354–00–20	24 – 11
F4P–U7462–01	25 – 7
F1B–U751G–10	34 – 17
F2C–U753B–01	34 – 20
F7K–U753C–01	34 – 6
F4P–U7550–00	34 – 1
F7L–U7555–01	34 – 7
F2C–U7557–01	17 – 12
F3X–U7564–00	33 – 3
F2C–U7564–02	34 – 21
GJ1–U7578–12	23 – 2
	23 – 5
GJ1–U7578–22	22 – 22
	22 – 23
	22 – 24
F1S–U757B–01	34 – 18
F7K–U758D–00	34 – 15
F2S–U759B–00	32 – 43

PART NO.	REF. NO.
F2S–U759B–00	32 – 44
F1K–U759C–00	26 – 28
	32 – 47
	32 – 48
	34 – 13
	34 – 14
F1W–U759C–01	22 – 11
	32 – 45
	32 – 46
F3X–U7617–00	33 – 15
F1B–U761D–02	28 – 7
F4P–U7626–00	33 – 7
	33 – 23
F7L–U7626–00	33 – 24
F4P–U7628–00	33 – 4
F4P–U7629–01	33 – 10
F4P–U7711–00	32 – 15
6EX–U773D–00	28 – 13
	33 – 11
F4L–U773D–00	32 – 50
F2T–U773D–20	13 – 2
	13 – 5
6EX–U773E–00	28 – 11
F3X–U7767–00	33 – 6
F3Y–U7767–00	32 – 33
F1B–U7773–00	32 – 19
F4P–U7823–00	29 – 25
	29 – 31
F3X–U7823–02	27 – 10
	27 – 22
F3X–U7823–12	26 – 33
	26 – 36
	27 – 2
	27 – 9
	27 – 14
	27 – 21
	29 – 10
	29 – 18
F2N–U7831–10	32 – 22
GP7–U7832–01	32 – 23
GP7–U7833–11	32 – 24
GP7–U7834–00	32 – 27
GP7–U7835–00	32 – 25
GP7–U783F–00	32 – 29
F4P–U7844–02	32 – 30
F0D–U7856–11	32 – 39
F3X–U7857–00	33 – 9
F4P–U785G–00	32 – 16

PART NO.	REF. NO.
F1K–U785G–01	32 – 37
GP7–U785H–01	32 – 34
F5G–U8090–01	22 – 39
F7M–U8102–00	23 – 1
F7M–U8103–00	23 – 4
F4P–U8167–10	32 – 17
F2N–U8169–10	28 – 34
	28 – 35
F7M–U81AJ–00	23 – 7
F7M–U820H–10	22 – 16
F7M–U820J–00	22 – 15
F2S–U8211–00	22 – 7
F4P–U821D–00	22 – 14
F1S–U8221–00	22 – 10
	32 – 49
	34 – 2
	34 – 12
EU0–U8221–31	22 – 12
F3J–U822E–01	22 – 18
F7M–U823K–00	22 – 17
F4N–U8262–00	26 – 11
F2C–U826C–00	26 – 20
	31 – 18
F1K–U826C–03	28 – 43
F1X–U826D–01	28 – 64
F4P–U8285–00	35 – 41
F4P–U828H–00	20 – 33
F2P–U828K–00	26 – 31
F1W–U828M–00	20 – 34
	22 – 26
	22 – 29
	22 – 32
	22 – 35
	30 – 6
	32 – 9
	32 – 12
	33 – 17
	34 – 24
F3X–U8377–00	33 – 22
F3P–U8571–00	17 – 10
	17 – 11
F2X–U8572–00	17 – 4
	17 – 5
F4P–U8572–00	28 – 45
F2S–U8577–00	17 – 6
F2S–U8592–00	22 – 4
	25 – 15
F2S–U8593–00	22 – 5

PART NO.	REF. NO.
F4N–U882F–00	28 – 53
F4N–U882F–10	28 – 56
F2M–U883B–00	15 – 22
F2N–U883E–00	15 – 19
F1S–U883N–01	28 – 29
F1S–U883P–01	28 – 30
F1X–U883T–02	28 – 31
F4N–U884R–00	28 – 54
F4N–U884R–10	28 – 57
F1K–U892D–00	15 – 23
F4N–U89AA–00–PC	27 – 25
F4N–U89AB–00–PC	27 – 27
F4N–U974A–00	26 – 32
F4N–U974B–00	26 – 35
F7M–UE6GA–00	23 – 8
F7M–UE6GA–10	23 – 12
F4P–UF8DM–00	25 – 22
F7M–UFG21–00	22 – 44
F7M–UFG22–00	22 – 46
F4P–UFRV1–00	25 – 19
6LE–W0001–00	41 – 1
6LE–W0001–20	41 – 18
6LE–W009A–01	2 – 1
6LE–W009B–10	3 – 5
90105–06028	1 – 2
90105–06035	3 – 39
	13 – 24
90105–06184	10 – 6
90105–06185	10 – 7
90105–06903	21 – 9
90105–06M07	3 – 12
90105–07006	5 – 4
90105–08021	3 – 34
90105–08054	10 – 9
90105–08169	10 – 10
90105–08170	10 – 11
90105–08243	6 – 6
90105–08249	18 – 15
90105–08860	28 – 32
	28 – 33
90105–10071	3 – 4
90109–06268	3 – 33
90109–06293	2 – 13
90109–06832	15 – 20
	28 – 60
90109–06874	24 – 17
90109–06875	24 – 18
90109–08041	17 – 13

PART NO.	REF. NO.
90110–06040	28 – 28
90110–06182	3 – 20
90110–06382	36 – 4
90110–06404	8 – 4
90110–06822	14 – 21
90110–08212	18 – 2
90111–06873	25 – 30
90111–06874	29 – 11
	29 – 19
90116–06051	3 – 35
90116–08032	6 – 16
90119–05803	22 – 2
90119–06078	2 – 16
90119–06311	20 – 18
90119–06832	22 – 8
	25 – 17
90119–06878	23 – 9
	23 – 13
90119–06880	23 – 11
	23 – 15
	25 – 35
	25 – 37
	26 – 1
	27 – 4
	27 – 16
90119–06882	26 – 9
90119–06889	14 – 10
90119–06891	15 – 14
	16 – 3
90119–06893	14 – 5
	35 – 42
90119–069UH	28 – 59
	37 – 26
90119–069UP	31 – 5
	31 – 10
90119–069UX	16 – 7
90119–06MA4	21 – 4
90119–07235	2 – 6
90119–08034	12 – 4
	12 – 10
90119–08096	12 – 12
90119–08097	12 – 5
	12 – 9
90119–08187	7 – 3
	21 – 6
90119–08822	26 – 22
90119–08823	17 – 8
	24 – 9

PART NO.	REF. NO.
90119–08823	24 – 10
90119–08827	17 – 9
	37 – 28
90119–08829	31 – 26
90119–08836	37 – 24
90119–08840	14 – 35
	16 – 5
90119–08851	35 – 43
90119–08859	24 – 7
	24 – 8
90119–08861	28 – 51
	28 – 52
90119–089U7	17 – 16
90119–089UT	20 – 1
	20 – 2
90119–089UU	15 – 13
90119–10076	12 – 13
90119–10810	14 – 3
	14 – 33
90149–05050	1 – 14
90149–06229	18 – 8
90149–10068	24 – 6
90169–049U1	32 – 26
90176–06047	3 – 36
90176–08080	6 – 17
90201–052E8	18 – 21
90201–06028	9 – 8
90201–06801	16 – 9
	16 – 12
90201–068G0	36 – 5
90201–06906	35 – 6
90201–10801	14 – 39
90201–109U6	31 – 14
	31 – 23
90267–329UR	32 – 28
90267–48802	20 – 35
	26 – 30
	33 – 18
90267–48806	22 – 27
	22 – 31
	22 – 33
	22 – 36
	22 – 43
	30 – 3
	30 – 4
	30 – 7
	32 – 10
	32 – 13

PART NO.	REF. NO.
90267–48806	33 – 19
	34 – 25
90267–489U1	13 – 35
	22 – 6
	25 – 16
	26 – 8
	26 – 27
	27 – 7
	27 – 19
	28 – 44
	31 – 20
	32 – 41
	34 – 5
90267–489U2	24 – 13
	24 – 16
	28 – 61
	32 – 5
	37 – 23
90267–489U6	29 – 13
	29 – 21
	32 – 7
90267–489U8	28 – 8
90280–03047	18 – 10
90387–06119	1 – 5
	20 – 20
	35 – 16
90387–06289	15 – 18
90387–06319	16 – 8
90387–06M05	18 – 22
	20 – 23
90387–08M06	14 – 36
90387–08M30	16 – 6
90387–08M37	7 – 2
	21 – 5
90430–06232	10 – 8
90430–06M03	3 – 13
90430–08119	2 – 8
90430–08209	9 – 10
90430–12002	17 – 15
90445–14807	14 – 29
90445–16027	13 – 19
90445–18012	13 – 8
90445–20800	28 – 12
90445–20804	28 – 10
90445–21806	13 – 1
90446–20MF5	14 – 31
90446–24M46	14 – 27
90447–19005	13 – 9

PART NO.	REF. NO.
90447–19021	13 – 17
90447–19801	13 – 3
90447–22015	11 – 2
90447–22016	11 – 5
90447–28008	3 – 41
90450–90002	7 – 4
	7 – 5
90450–99801	34 – 9
	34 – 16
90450–99804	34 – 10
90450–99808	12 – 18
90450–99809	12 – 19
90464–31001	21 – 18
90464–31002	21 – 19
90464–31827	22 – 25
90464–32801	20 – 36
	22 – 19
	22 – 20
	22 – 21
	22 – 28
	22 – 30
	22 – 40
	23 – 3
	23 – 6
	28 – 47
	32 – 11
	32 – 14
	33 – 16
	34 – 26
90464–35132	13 – 11
90464–40825	7 – 14
90464–99804	30 – 8
90465–11829	14 – 30
	28 – 9
	32 – 35
	32 – 36
	32 – 38
90465–14M66	20 – 32
90467–141A3	13 – 15
	13 – 20
90467–150A1	3 – 31
90467–150A5	13 – 29
	34 – 23
90467–160A0	13 – 10
	13 – 18
	13 – 22
90467–17802	33 – 5
90467–180A5	28 – 6

PART NO.	REF. NO.
90467–180A5	28 – 15
90467–190A0	11 – 3
	11 – 8
90467–190A2	32 – 18
90467–200A3	11 – 7
	13 – 6
	13 – 13
	13 – 33
	13 – 34
	28 – 4
90467–240A0	3 – 42
	11 – 6
90467–240A3	28 – 5
90480–19800	22 – 1
90480–22801	7 – 11
90480–22M15	7 – 1
	21 – 7
90601–118UF	14 – 28
	28 – 3
90601–155U4	15 – 21
	32 – 31
	32 – 32
90601–170UG	34 – 8
90601–200U1	33 – 8
	33 – 12
	33 – 14
	33 – 21
	33 – 25
90601–200U2	22 – 38
91314–06060	9 – 7
91317–05010	18 – 20
91317–06014	18 – 19
91380–04030	36 – 7
91380–06016	21 – 14
91380–06020	18 – 23
91380–06025	5 – 20
91809–16002	2 – 4
	2 – 5
92014–06030	5 – 17
92903–08600	19 – 16
92990–06100	19 – 17
92990–12200	17 – 14
	28 – 25
92990–20600	14 – 17
9299R–05200	28 – 39
	28 – 40
9299R–10200	31 – 15
	31 – 24

PART NO.	REF. NO.
93101–31001	14 – 15
	41 – 25
93102–29008	15 – 4
	41 – 20
93102–29009	15 – 7
	41 – 21
93102–31009	14 – 14
	41 – 24
93210–06632	3 – 27
93210–11453	3 – 3
	41 – 4
93210–12016	3 – 32
	41 – 9
93210–13003	6 – 13
93210–18322	10 – 13
	41 – 8
93210–19123	1 – 8
	41 – 10
93210–21631	8 – 6
	41 – 7
93210–22MF1	15 – 2
	41 – 19
93210–30611	14 – 24
	41 – 27
93210–30M31	13 – 25
93210–54010	14 – 20
	41 – 26
93211–65801	14 – 7
	41 – 22
93306–00809	18 – 12
93306–206Y7	14 – 11
93306–206Y8	15 – 6
93306–355Y0	14 – 13
93410–12003	19 – 7
93450–22174	4 – 6
93604–10M03	3 – 8
	10 – 5
93606–12019	3 – 7
	8 – 3
	12 – 8
	14 – 32
	15 – 17
93608–16M16	12 – 3
93700–06M03	15 – 9
94591–74152	5 – 14
94702–00427	21 – 10
95312–20700	14 – 18
95380–06600	16 – 10

PART NO.	REF. NO.
95380–06600	16 – 13
95380–06700	19 – 18
9538R–06700	35 – 7
95720–08300	37 – 11
9572R–05300	28 – 41
	28 – 42
9572R–06300	32 – 21
9572R–08300	28 – 17
	28 – 18
	31 – 35
9572R–10300	14 – 40
	31 – 16
	31 – 25
95814–06012	20 – 7
	20 – 29
95814–06016	3 – 25
95814–06070	3 – 6
95814–08020	3 – 24
	9 – 9
95817–06014	9 – 6
95824–06025	1 – 6
95E33–06012	6 – 20
95E34–06014	3 – 17
95E34–06020	3 – 18
	9 – 12
95E34–06035	9 – 11
95E34–08012	2 – 7
95E34–08035	12 – 16
97013–08030	19 – 15
97513–05514	18 – 9
97513–06555	2 – 11
97513–08535	6 – 15
97513–10525	2 – 18
97780–60025	20 – 22
97780–60516	7 – 10
9788R–05025	28 – 38
97E95–06612	20 – 27
97E95–08540	3 – 14
99009–62500	15 – 5
99009–72500	18 – 14
99530–10114	3 – 2
	3 – 21
	18 – 16
99590–14016	14 – 2
99780–12600	28 – 24

PART NO.	REF. NO.

PART NO.	REF. NO.